www.standardmoto.com

Standard Motor Corp

Sports ATV/Quads

500 cc

Service Manual

Standard Motor Corp
正鶴工業股份有限公司

GENERAL INFORMATION 1

ENGINE 2

ENGINE REMOVER 3

FUEL SYSTEM 4

BODY/STEERING/SUSPENSION 5

BRAKES 6

COOLING SYSTEM 7

ELECTRICAL 8

SERIAL NUMBER

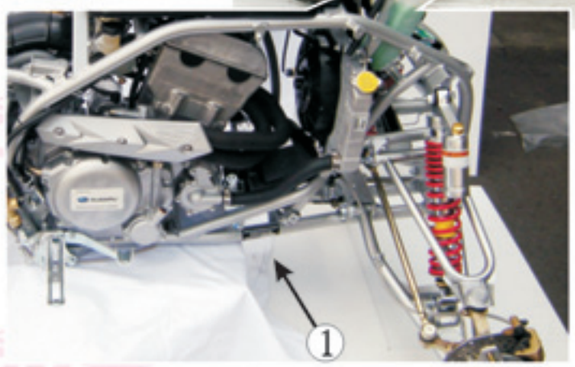

1. Location of Frame Serial Number

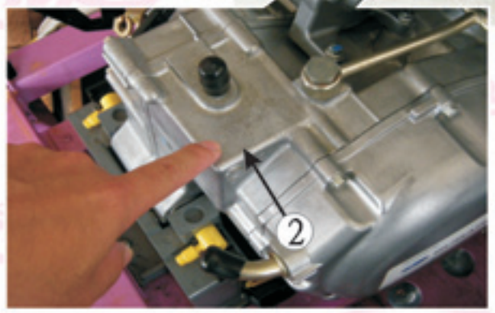

2. Location of Engine Serial Number

SPECIFICATION

5 Speeds Gear Sports 501/502/503

Dimension: 501/502 : 1795mm/1140mm/1185mm 503 : 1763/1265/1008mm
Seat height: 880mm
Wheel base: 1250mm
Weight: Un-laden Mass = 198kg; with fuel Mass = 207kg

Engine: Fuji DOHC 4 Stroke Liquid Cooled
Cylinder: Single Vertical (Forward Inclined)
Bore * Stroke: 99.2 x 64.6mm
Displacement: 499cc
Carburetor: Mikuni BSR 42mm

Spark: NGK DCPR8E x 1
Starting: Electrical starter
Ignition: C.D.I.
Generator: ACG Fly Wheel Magneto 200W @ 3,000 rpm
Battery: Maintenance-Fee YUASA YTX 12A-BS or GTX12L-BS

Engine Oil: 4 Stroke Motorcycle Engine Oil 10W40 ie. Shell Advance VSX4 (synthetic)
Engine Oil: at change (1.9L) at disassembly (2.1L)
Air-Filter: Wet type element

Transmission (F-R): 5 speeds manual Forward/Reverse shift selector function with Brake
RPM limit: Forward limited 9,100 +/- 100 and Reverse 5,000 +/- 100.

Fuel: Unleaded gasoline (98 Octane)
Fuel tank: 12L

Radiator (water cooler): 1.1 L coolant (standard concentration 50%)
Reserve tank cooler: 300cc +/- 20cc coolant (standard concentration 50%)

Brake (F/R): Disc/Disc
F. Brake operation: Front R side hand lever for front wheeler or others
F/R operation: Foot rest R side foot pedal for 4 wheeler or others

Tire: Tubeless
Front/Rear: (F) AT 21x7-10, or AT 22x7-10, or 175/70-10
(R) AT 20x10-9, or AT 22x10-10

Chassis: Steel tube frame
Rider: Single rider is recommend by maker (E/e Mark is double rider)

Head Light: 12V 35/35W* 1 (Option)
Rear Light: 12V 21/5W* 1 (Option)
Flasher Light: 12V 10W* 4 (Option)

CGV 500 special tools 特殊工具

1. 零件編號：88888-FHI-00　ENGINE BASE PLATE AY　發動機基礎盤

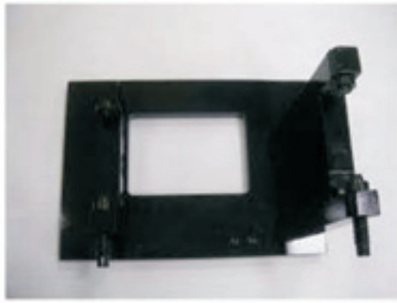

2. 零件編號：88888-FHI-01　CASE SEPARATOR KIT　曲軸箱分離器（CGV）

3. 零件編號：88888-FHI-02　MAG REMOVER　電盤拔取工具（CGV）

4. 零件編號：88888-FHI-03　CRANK ASSEMBLY TOOL KIT　曲軸裝入工具

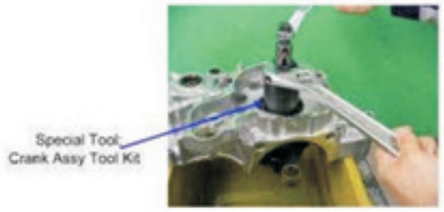

5. 零件編號：88888-FHI-04　PISTON SUPPORT PLATE　活塞支撐盤（CGV）

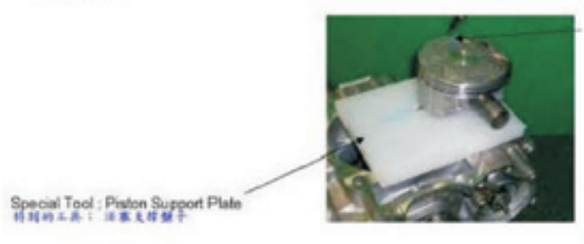

6. 零件編號：88888-FHI-05　RING BAND　油環帶（CGV）

Or

7. 零件編號：88888-FHI-06　OIL SEAL GUIDE　油封導件（CGV）

8. 零件編號：88888-FHI-07　WRENCH （COUNTER SHAFT）　副軸鬆脫工具

9. 零件編號：88888-FHI-08　CHAIN　TENSIONR TOOL　鏈條調整器工具

10. 零件編號：88888-FHI-09　CAULKING TOOL　填塞工具（離合器華司）

11. 零件編號：88888-FHI-10　WEIGHT-TIMING　CHAIN　鏈條重錘勾　（weight – timing chain）

12. 零件編號：88888-FHI-11　CRANK SPROCKET　曲軸固定套筒　（crank sprocket）

13. 零件編號：88888-FHI-12　VALVE ASSEMBLY TOOL　閥門裝置工具（CGV）（valve assy tool）

14. 零件編號：88888-FHI-13　ENGINE HANGER　引擎吊環（CGV）（吊引擎用）

15. 零件編號：88888-FHI-14　TDC& BDC ADJUSTER TOOL　曲軸上下死點調整工具（CGV）
（調整曲軸之上死點與下死點）

SERVICE INFORMATION - 500 PDI (Pre-Delivery Inspection)

Pre-Delivery Inspection (PDI): The dealer or service station will assemble and inspect the ATV according to the following pre-delivery information and checklist before delivering to the customer! Importer must follow all details steps on this process to make sure the vehicle is under corrected condition before sending to end user. If there is any abnormal condition during PDI, be sure to provide the evidence and report to the Area importer. For any mistake for without proper PDI process happen in vehicle, Maker pays no responsible of claim or warranty.

Part 1: Un-loading, Un-package, and Assembly

1.Be sure to take very carefully during the un-loading.

- WARNING: Be sure to use the correct size of fork life or equipment to un-load the package.
- CAUTION: Whenever the damage or unusual condition of package, be sure to take the photo of condition. Be sure report the carton number, engine/frame number.

2.Follow each steps to un-pack the carton refer to the photo introduction.

3.Follow each steps to install each devices:
(rear carrier; foot stand; rear shock; front shock; tire pressure and wheel installation; handle bar and cover; front bumper)

- NOTE: the Rear shock relay arm = 55 Nm(5.5 m.kg);
  Front shock nut/bolt = 45 Nm(4.5 m.kg)
- CAUTION: Some items may not be applicable to all models. ie. with/without the nerf-bar or rear rack

Part 2: Important Information

1. Owner's manual and tool kit: Be sure to keep the owner's manual and tool kit (includes low-pressure tire gauge) all the time with ATV. This manual and tool kit are part of the ATV and please keep them for ready use, even when the ATV is resold. The replacement owner's manual and tool kit are available from each Area/Territorial Distributor.

2. Records: To ensure that the ATV always keeps good performance, it is necessary to make periodical checks and maintenances. Be sure to keep the following record during service maintenance

Part 1. Vehicle Information			
Name :	Tel :	Address :	
Model :	Engine #	VIN #	
License :	Purchasing Date :		
Local Dealer Information		Distributor Information	
Part 2. Periodical Check			
	Check Date	Check item	Confirmed by Local Dealer
10hrs. 100 km			
60hrs. 1000 km			
110hrs. 2000 km			
more	<Be sure to keep maintenance every 100hrs/100km>		

- CAUTION: Be sure to perform the initial maintenance for changing gear oil, ... other inspection after 1st. month operation. Periodic inspection, adjustment, and lubrication will keep ATV in the safest and best operation condition. Be sure to use only genuine maker parts for replacement. For avoiding sudden driving please always shift transmission paddle into Neutral (N) and do not make any acceleration on N position. Do not make any acceleration during F-R operation. Maker will pay no any responsibility whenever the mistake of user on F-R operation.

3. Pre-Delivery Inspection: The dealer or service station will assemble and inspect the ATV according to the following pre-delivery checklist before delivering to the customer. (Some items may not be applicable to all models.)

ItemsContents	
Appearance	*check the overall out-looking and correct any surface damage or missing parts
Battery	* fill with electrolyte, or charge battery properly, check vent hose routing
Valves	* check valve clearances, and check cam chain tension
Spark plug	* check gap
Carburetor	* drain float bowl(s) before starting, check idle speed, synchronization, starter operation
Fuel line	* check fuel hose routing and ensure that clamps are in proper position
Oil Level	* check engine oil (4-stroke) level, transmission, final drive oil
Coolant	* check the coolant level in Reserve tank; check radiator when engine is cold.
Cables	* check for proper routing and free play on throttle, brake, clutch
Clutch	* check operation
Reverse lock out	* check F-R operation
Brakes	* check operation, free play, fluid level, and check parking brake operation
Drive chain	* check free play
Wheels	* check tire pressure and wheel run out, and check wheel nut torque
Steeringsystem	* check turning operation, and check the toe-in
Suspension	* check operation and adjustment
Fittings/ Fasteners	* check headlight aim * check all for loose or missing hardware
Electrical	* check all light and switch operations * check speedometer for proper operation
Ignition	* check ignition timing
Fina	* check and correct any damage or missing parts * re-check and tighten all screw, nuts, bolts. * test ride and observe any abnormal noise or function. * owner's manual, tools pack, low-pressure gauge * record end-user's information and keep the records for service

- Caution the E/e Mark ATVs: The ATV for on-road use has to match the local riding law and regulation.

PREPARATIONS AND PRECAUTIONS for Disassembly & Reassembly

Use genuine parts. With regards to the oil, adhesive and sealing agent, also use genuine or recommended one.

With regards to gasket, O-ring, piston clip with new one, replace with new one when reassembling.

When disassemble engine, memorize the location of each part so that you can reassemble the engine correctly. To prevent parts from being mislaid, keep each group provisionally assembled after removing the parts from the engine.This will make reassembly easier.
If necessary, attach identification tags with the required assembly information to the parts.

Handle the disassembled parts with the utmost care. Before measuring and reassembly, clean them with cleaning agent. Remove cleaning agent by means of pressurized air.

Apply oil onto rotating and sliding surface without fail when reassembling. Also apply recommended grease onto the specified portion.

Use the special tool in the correct way when disassembling and reassembling the engine.

Tighten bolts and nuts in the order; temporally tighten and then tighten from larger diameter one to smaller diameter one, from inner one to outer one in an even, crisscross pattern.
Finally tighten to the specified tightening torque. Reverse the order when retightening.
Replace special bolt (with sealing agent) with new one.

Never reuse the press-fitted ball bearing if any excessive force was applied when removing.

Make sure ball bearing is smoothly operated by turning inner or outer race with your finger. Replace with new one, if the excessive free play is available in axial or longitudinal direction.

Install bearing with the marking or stamping faced outside. Never apply the force onto balls when press-fitting ball bearing.

Install oil seal with main lip faced towards oil chamber and with the brand marking or designation stamping faced outside. Be sure to install oil seal with grease applied to lip, and not to damage the lip with sharp edge or burrs.

Remove gasket and sealing agent thoroughly from the mating surface of cases before reassembling.

Make sure smooth rotation and operation of each parts during reassembling.

Removal and Installation

- Engine removal from vehicle
- Installation onto vehicle

} OEM (vehicle manufacturer) to complete

1. Disassembly

1-1) Set the engine assembly onto Special Tool; Engine Base Plate AY.
固定架子上

[Take out Cover CP (Drive Chain) and Plate (Drive Chain).
Take out parts on the vehicle side.
M6×25L BOLT 2 pcs.]

1-2) Operate Shift Pedal to engage the transmission gears.
Remove bolts and take out Fixing Plate, and then remove Sprocket 14T.
固定板

M6×12L BOLT 2 pcs.
(T-wrench : 8 ㎜)

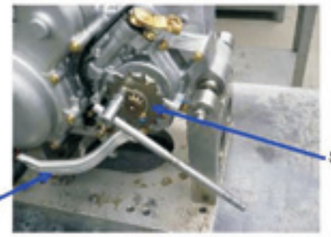

1-3) Remove Shift Pedal.
踏踩
M6×25L BOLT 1 pc. 变速器
(Box-end wrench : 8 ㎜)

1-4) Remove Reverse Arm Lever (Reverse L (倒挡领)

M6×12L 1 pc.
(T-wrench : 8 ㎜)

1-5) Remove carburetor. (卸下化油器)

M4×30L Screw 1 pc.
(Philips driver : Medium size)

1-6) Take out Oil Delivery Pipe Assy.
Remove upper side banjo bolt (oil fitting) first 送油管

M12 Banjo bolt 3 pcs. 班卓写式螺栓
(Box-end wrench : 17 mm)

Note; Pay attention not to lose total 6 cupper washers.
垫片6长不要丢掉

1-7) Remove MAG Cover CP. 飞轮外壳
Note; Adopt tray or clothes (waste) to prevent oil pollution.
M6×35L 11 pcs. (T-wrench : 8 mm)

Remove Reduction Gear 1, Shaft 1 变速齿轮
Reduction Gear 2 , Shaft 2. Make sure their original positions for reassembling.

1-8) Remove Oil Filter Cover and take out Oil Filter CP.
Note; Adopt tray or clothes (waste) to prevent oil pollution.

M6×25L 2 pcs. (T-wrench : 8 mm)
M6×65L 1 pc. (T-wrench : 8 mm)

Remove Oil Filter CP, O-ring and Spring (Filter).
机油滤虑器, 密封圈, 弹簧

1-9) Remove Clutch Cover CP. 离合器外壳

Note; Adopt tray or clothes (waste) to prevent oil pollution.
有点漏油要注意

M6×25L 11 pcs. (T-wrench : 8 mm)

1-10) ①Remove Clutch. 离合器
Remove bolts and take out Spring and Washer.

M6×35L 6 pcs. (Allen wrench : 5 mm)

Take out Disk (Clutch Pressure). 回板
Take out Pusher. 推杆 挺杆
Remove Push Rod by depressing Release Lever.

②Take out Release leve 放松杆

③Remove Lock Nut (锁栓锁)
Note; Lock Nut was caulked, and so unlock the caulk by using drill.
(Use air-assist tool)
(使用冲击拌手)

M18 Lock Nut (Box wrench : 27 mm)

④Take out Lock Washer. Note; Make sure the Lock Washer orientation for reassembling.
⑤Take out Clutch without Distance Collar and Thrust Washer dropped out.,
管道 垫片

1-11) Remove Oil Pump. 机油泵
Take out Snap Ring and Oil Pump Gear.

Remove bolts and take out Oil Pump Case.
M6×30L 3 pcs. (T-wrench : 8 mm)

机油泵主体 (含有给油泵, 回油泵, 机油泵轴)
Take out Oil Pump; Feed Pump, Scavenging Pump, and Oil Pump Shaft etc.

1-12) Take out Shift Shaft. CP along with washer.. (变速轴)
Note; Fit the washer onto the Shaft; not to lose it.
(防备丢掉垫片, 要放在变速轴上)

1-13) Remove Guide Plate and Drum Shifter.
Remove bolts, and take out Guide Plate and Drum Shifter.
M6×20L 2 pcs. (T-wrench : 10 mm)
导板, 鼓形转换器,

Note; Pay attention Drum Shifter is not disassembled.
Make sure the orientation for reassembling.

1-14) Take out Shifter Pin and then pull out Shifter Cam.
(Deep-type socket wrench : 12 mm)
拨叉销, 拨叉凸轮

1-15) Remove Stopper Arm. 锁指杆
Remove bolts, and take out Stopper Arm and Spring (Stopper)
M6 Stepped bolt 1 pc. (T-wrench : 10 mm)

1-16) Remove Switch (Position). 定位开关
Take out Point (Neutral) along with Spring (Point).
点测头 弹簧

M5×20L SCREW AND WASHER 2 pcs.
(Philips driver : Medium size)

1-17) Remove Primary Gear. 初次齿轮
Remove M18 nut by air-assist t (Box wrench : 27 mm)
Take out washer and Primary Gear.
(使用冲击扳手)

Note ; Pay attention large spline outting for alignment with crankshaft, when reassembling.

(初次齿轮内侧有定位)

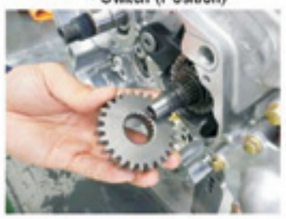

1-18) Remove Head Cove (缸盖外壳)
Remove bolts and 橡胶垫
take out Rubber Mount, O-ring and Head Cov橡胶座

M6×14L 4 pcs. (T-wrench : 8 mm)

1-19) Remove Spark Plug (Box wrench : 16 mm)
(火花塞)

1-20) Remove Chain Tension (链条张紧器)
Align the engine TDC.

Remove bolt.
M6×8L 1 pc. (T-wrench : 10 mm)
Remove bolts and take out Chain Tensioner.
M6×25L 2 pcs. (T-wrench : 8 mm)

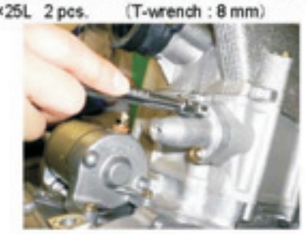

Align the engine TDC.
(压缩上止点)

(压力注意)
Untighten upper and lower bolts evenly.

1-21) Remove Cam Support and Camshafts.
Remove bolts and take out Cam Support.
M6×40L 8 pcs.

Take out Intake Camshaft and Exhaust Camshaft along with Bearing supports.
Note; Pay attention not to lose Bearing Supports.

定位链条 缸盖
Take out Crank Sprocket by holding the chain at the upper portion (cylinder head side).
Note; Take out Chain Sprocket first.

1-22) Take out Timing Chain.
Take out chain upwards.
定位链条 从上取出

1-23) Remove M14 flange nut on MAG side by using air-assist tool.
(Box wrench : 19 mm)

1-24) Take out Magneto Assy by means of Special Tool; MAG Remover.

By using air-assist tool, turn Special Tool; MAG Remover.
使用冲击扳手

起动齿轮 滚针轴承 垫片
Take out along with Starter Gear, Needle Bearing and Spacer.
Pay attention not to drop Needle Bearing out.
防止滚珠轴承落掉

1-25) Remove Thermostat cover and Thermos (恒温器)
Remove bolts and take out Thermostat Cover and Thermostat.
M6×20L 2 pcs.

Note; Pay attention the orientation of Thermostat for reassembling; Opening is upwards.

1-26) Remove Water Pump Case and Water Pump.
Remove bolts (7 pcs.) and take out Water Pump Case.
(BOX wrench : 8 mm)

Note; Adopt tray to prevent coolant pollution
Make sure the original position of a cupper washer.

1-27) Take out Impell (卸下叶轮)
(Deep-type Box wrench : 12 mm)
Take out Sealing Washer.

Note ; Never depress impeller.
When reassembling, replace with new Sealing Washer.

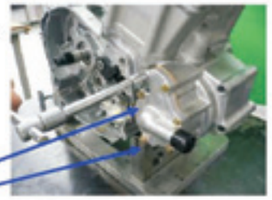

1-28) Remove Cylinder Head Assy (卸缸盖)
Remove two (2) M6 bolts.
Remove four (4) M11 bolts evenly and diagonally.
Take out Cylinder Head Assy along with Head Gasket.

M6×140L 2 pcs. (T-wrench : 8 mm)
M11×198L 4 pcs. (Deep-type Box wrench : 14 mm)

(导轨) (链条导杆)
1-29) Remove Lever CP. Remove Chain Guide.
Remove pivot bolt and take out Lever CP.

M8×22.5L Pivot bolt
(Allen wrench : 6 mm)

1-30) Take out Cylinder and Gasket. (缸筒, 垫片)
Note; Use Special Tool; Piston Support Plate.
Hold Piston not to damage it.

1-31) Take out Piston (活塞)
Remove Clip on one side and pull out Piston Pin, and then take out Piston.

1-32) Remove Starting Mc (卸下启动马达)
Remove bolts and take out Starting Motor.
M6×25L 2 pcs. (T-wrench : 8 mm)

1-33) Disassemble Crankcase Ass (分离曲轴箱)

Take out the crankcase from Special Tool;
Engine Base Plate AY and set it with the clutch side facing up on the plastic container.
飞轮侧向上，放在塑胶箱上

One bolt on Clutch side
M6×40L 1 pc. (T-wrench : 8 mm)

Total 15 bolts on MAG side (T-wrench : 8 mm)
M6×40L 7 pcs.
M6×75L 7 pcs.
M6×50L 1 pc.

On MAG side

Place the crankcase with the Clutch side facing up on the plastic container.

(机箱分离器) (离合器盖)
Attach Special tool; Case Separator Kit onto the clutch cover mating surface of the crankcase.
Tighten two (2) bolts evenly, keeping the opening between crankcase mating surfaces in the parallel condition.
(Box-end wrench : 12 mm)
Note; Place Special Tool ; Guide (Oil Seal) onto the crankshaft without fail.
(轴环一定要使用)

Special Tool; Case Separator Kit

1-34) Transmission
(变速器)
① Take out Fork Shafts (2 pcs.).
(拔叉轴)
② Pull out Spring located under the Fork Shaft on the counter shaft side. (还击轴)

huan ji cha zi
还 击 叉子

③ Take out Shift Fork (Main), Shift Fork (Right) and Shift Fork (Left). (换挡拨叉) 右Right 左Left

Note; Make sure their original positions for reassembling.

④ Take out Shift Drum CP with the Reverse Lock released.
(倒挡锁) (换挡圆柱)

⑤ With the case put in the upright position, take out Main Shaft and Counter Shaft. (主动轴) (传动轴)

Shift Drum CP removed

⑥ With the case put in the original position again, take out Reverse Shaft CP
(Reverse Idle Gear, Collar, Washer etc.)

Note; Pay attention not to lose the Counter Shaft washer.
(不可丢失传动轴垫片)

⑦ Remove Oil Strainer UN.
(机油过滤网)

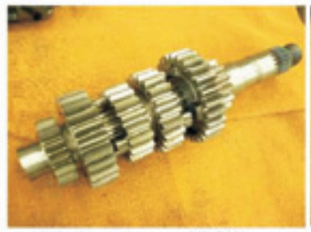
Main Shaft Assy (主动轴)

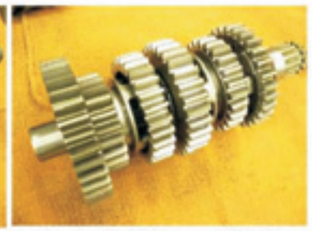
Counter Shaft Assy (传动轴)

(平衡器齿轮)
1-35) Align the mating markings, and take out Balancer Shaft by lightly tapping with plastic hammer.

(压力机或冲床)
1-36) By means of hand-press machine, depress the MAG side end of the Crankshaft and take out Crankshaft from crankcase 1..
(压飞轮侧曲轴头顶)

2. Inspection

2-1) CYLINDER HEAD

① **Disassembling**

(Note) Identify the original position of disassembled parts, with marking as necessary. Place them in order on the clean table.

* Remove Valve lifter and adjusting pad.
Valve Lifter is easily taken out by magnetic tool.
(Note) Put ID onto the parts at taking out from either IN or EX side.

* While depressing Valve Spring with exclusive tool (Valve spring compressor), take out Colette.

Exclusive tool (Valve spring compressor)

* Take out Spring Retainer, Spring (inner and outer), Seat (spring).
* Take out IN and EX Valve.
* Take out Valve (Seal).

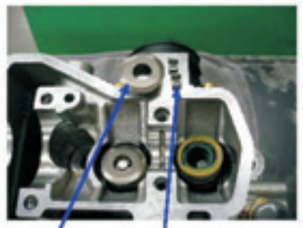

② **Cylinder Head warpage**

* Clean and remove carbon deposits from the surface. Never damage the surface when cleaning.

* Place the measuring block diagonally on the surface, and check with thickness gauge.
* If the result is out of specifications, replace with new Cylinder Head.

Cylinder Head warpage	
Service Limit	0.05mm

③ **Inner diameter (ID) of Valve Guide**

* Clean up the Valve Guide hole.
* Measure ID of Valve Guide at total 6 points; upper, middle and bottom positions and X- and Y-directions, by means of dial caliper

Valve Guide ID		
STD	IN	6.000~6.012mm
	EX	6.000~6.012mm

2-2) INTAKE and EXHAUST VALVE

① **Valve Stem runout**

* Remove carbon deposits.
* Measure the runout by means of dial gauge.
* If the result is out of specifications, replace with new Valve.

Valve Stem runout	
Service Limit	0.01mm

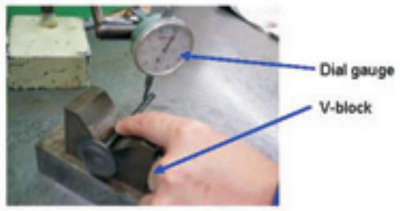

② **Outer diameter (OD) of Valve Stem**

* Measure OD of Valve Stem sliding portion at total 6 points; upper, middle and lower positions and X- and Y-directions, by means of micrometer.

Valve Stem OD		
STD	IN	5.950~5.965mm
	EX	5.945~.960mm

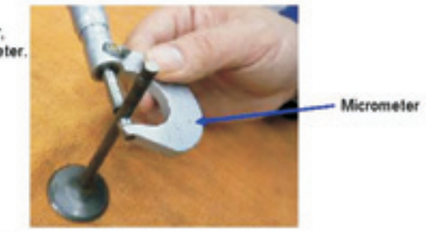

③ **Clearance between Valve stem and Guide**

Clearance is the difference between ID of Valve Guide and OD of Valve Stem
ID of Valve Guide minus OD of Valve Stem.

Clearance		
Service Limit	IN	0.15mm
	EX	0.15mm

④ **Width of Valve face**

* Measure the marginal width of valve face portion.
* If the result is out of specifications, replace with new valve.

Marginal width of valve face portion		
Service Limit	IN	0.8mm
	EX	0.8mm

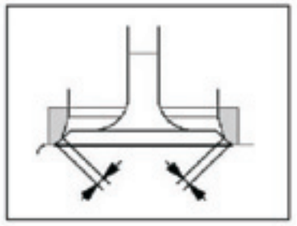

⑤ **Valve Spring free length**

* Measure the free length of inner and outer Valve Spring.
* If the result is out of specifications, replace with Spring as a set

Valve Spring free length		
Service Limit	Inner	38.0mm
	Outer	39.9mm

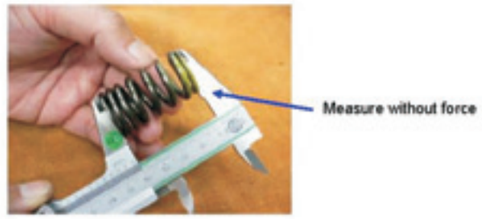

2-3) CAMSHAFT

① **Cam profile height**

* Check for damage and ware on cam profile.
* Measure the height of cam profile.

Cam profile height		
Service Limit	IN	42.05mm
	EX	42.05mm

Visual checking for cam profile portion

Measure the height Micrometer

② **Oil clearance at cam journal portion**

* Measure the ID of cam journal portion with Cam Support fixed to the specified tightening torque; 9 – 11 N-m.

ID of cam journal portion	
STD	25.000~25.021mm

* Measure the OD of Camshaft journal portion with micrometer

OD of Camshaft journal portion	
STD	24.946~24.963mm

* Oil clearance is ID minus OD.

Oil clearance at cam journal portion	
Service Limit	0.10mm

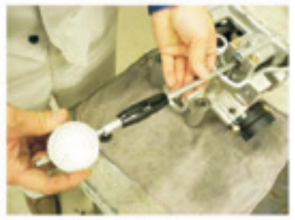

Measure the ID

Measure the OD

③ Visual Checking
* Check for ware and damage on Cam Sprocket gear teeth.

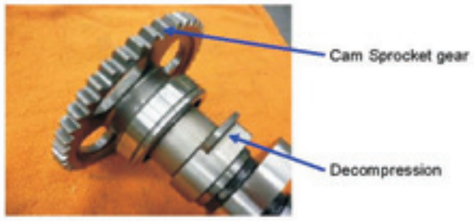

* Check for ware and damage on decompression related parts.
* Check if decompression would be operated smoothly.

* If any parts would be damaged or worn, replace with new Camshaft Assy.

2-4) CYLINDER

① **Cylinder warpage**
* Clean and remove carbon deposits from the surface. Never damage the surface when cleaning.
* Place the measuring block diagonally on the surface, and check with thickness gauge.

Cylinder warpage	
Service Limit	0.05mm

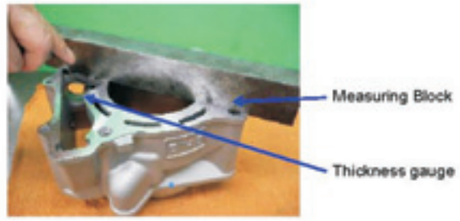

② **Cylinder bore**
* Check for damage or ware on bore surface.
* Measure the cylinder bore at total 6 positions; top, middle and bottom positions and axial (Camshaft and right angle directions.

Cylinder bore	
STD	99.200~99.220mm

2-5) PISTON and PISTON PIN

① **Piston OD**
* Check for ware and damage on the sliding surface.
* Measure OD of Piston at 11 mm distance from the bottom end in the right angle against Piston Pin with micrometer.

Piston OD	
STD	99.155~99.170mm

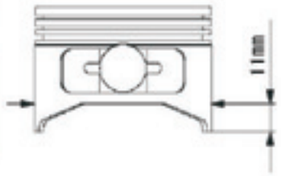

② **Clearance between Piston and Cylinder**
* Clearance is Cylinder ID minus Piston OD.

Clearance	
Service Limit	0.100mm

③ **ID of Piston hole for Pin**
* Clean Piston hole for Pin.
* Measure ID in the up and down direction and the right angle direction with dial caliper gauge

ID of Piston hole for Pin	
STD	23.001~23.007mm

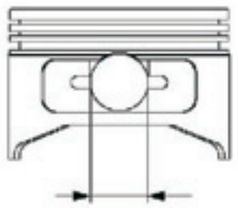

④ **Piston Pin OD**
* Check for ware and damage on the sliding surface.
* Measure OD at total 3 positions; both ends and middle position in the X- and Y-direction.

Piston Pin OD	
STD	22.994~23.000mm

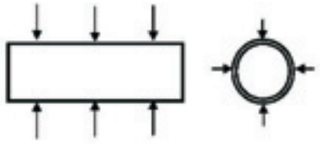

2-6) CONNECTING ROD

① **Small end ID**
* Check for ware and damage on the sliding surface.
* Measure ID in the X- and Y-direction with dial caliper gauge.

Small end ID	
STD	23.007~23.020mm

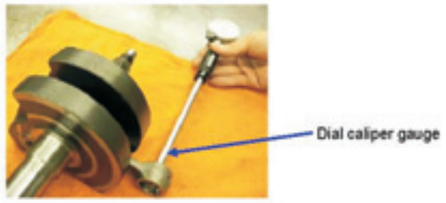

② **Clearance between Small end ID and Piston Pin OD**
* Clearance is small end ID minus Piston Pin OD.

Clearance	
Service Limit	0.05mm

2-7) PISTON RING

① **Clearance between Piston Ring and groove**
* Remove carbon deposits from Rings and grooves.
* Measure the clearance between Piston Ring and groove, by holding the Ring upwards in the groove, with thickness gauge.

Clearance		
Service Limit	Top	0.15mm
	Second	0.15mm

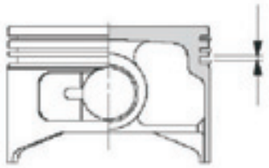

② **Piston Ring gap (opening)**
* Insert Piston Ring into the lower portion of Cylinder horizontally by using Piston.
* Measure the Piston Ring gap (opening) with thickness gauge.

Piston Ring gap (opening)		
Service Limit	Top	0.7mm
	Second	0.8mm
	Oil	1.0mm (Side rail)

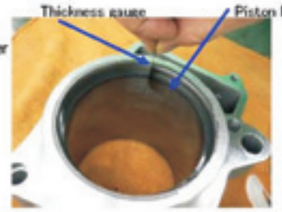

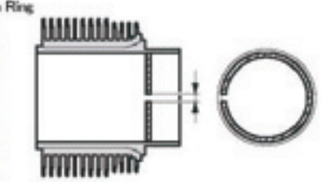

2-8) CRANKSHAFT

① **Runout**
* Set on the V-block and measure runout with dial gauge.

Crankshaft runout	
Service Limit	0.06mm

② **Side-clearance at large end of Connecting Rod**
* Measure the side-clearance at large end of Connecting Rod with thickness gauge.

Side-clearance	
Service Limit	0.65mm

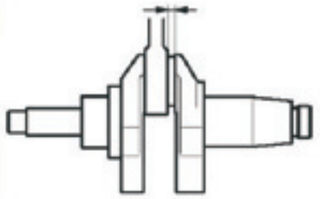

2-9) TIMING CHAIN

● **Chain pitch**
* Check for ware, damage and roller fallout.
* Place Chain on the flat table and pull with the 127N (13 kg) force and th measure the length of 67 pitches.

Timing Chain (67 pitch)
Service Limit 431.8mm

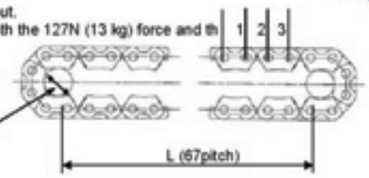

2-10) STARTING GEAR/ONE-WAY CLUTCH

● **Disassembly**
* Remove One-way Clutch from Flywheel Assy.

Fastener ; M6 X 16L bolt (socket head) 8 pcs.
(Allen wrench ; 4 mm)

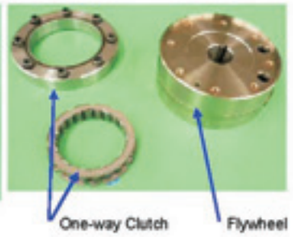

2-11) CLUTCH

① **Visual checking - Pressure Disk**
* Check for ware and damage.
* Check for movement of bearing.
* If any fault would be found, replace with new one.

② **Visual checking - Plate and Disk**
* Check for ware and deformation on Plate.
* Check for ware and damage on Disk.
* If any damage or excessive ware would be found, replace with new one as a set.

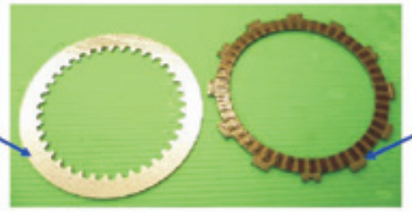

③ **Width of friction material**
* Measure the width of friction material with caliper gauge.

Width of friction material	
Service Limit	2.8mm

(Note) Clutch Disk A and B are available. Clutch Disk B should be facing front side.

④ Visual checking - Release Shaft and Push Rod

Release Shaft

Push Rod

2-12) TRANSMISSION

① **Visual checking - Shift Fork and DRUM**
* Check for ware and damage.
* If any ware on the Fork craw portion, replace with new one.

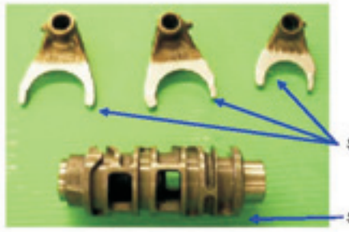

② **Width of Shift Fork groove on Main Shaft**
* Check for ware and scratch in the Fork groove.
* Measure the width of Shift Fork groove with caliper gauge

Width of Shift Fork groove	
STD	5.10~5.17mm

③ **Width of Shift Fork craw**
* Measure the width of Shift Fork craw with micrometer.

Width of Shift Fork craw	
STD	4.93~5.00mm

④ **Clearance between Shift Fork and groove**
* Measure the clearance between Shift Fork and transmission gear groove at craw portion, with thickness gauge

Clearance	
STD	0.1~0.24mm

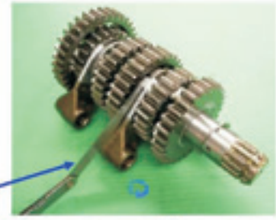

⑤ **Visual checking – Main Shaft and Counter Shaft Assy**
* After disassembling, check for ware and damage on dug clutch portion, gears and spline portions.

* If any ware and damage, replace with new one.

Counter Shaft ASSY

2-13) CLUTCH

● **Sub-assembling**

① Set Washer first.

(Set Disk A and B alternately.)

③ Set Disk B at the bottom position.
④ Set pressure plates (7 pcs.)

② Set Center CP

⑤ Set Disk A, Clutch (7 pcs.)

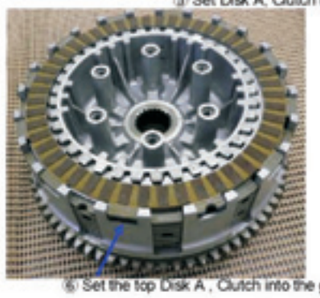

⑥ Set the top Disk A, Clutch into the groove.

2-14) MECHANICAL SEAL

● **Replacement**

① Remove Mechanical Seal.

② Take out Mechanical Seal.

③ Install Mechanical Seal.

3. Reassembly

Reassembly should be performed in the reverse order of Disassembly.

3-1) Press-fit crankshaft into crankcase 1 by means of .
Special Tool; Crank Assy Tool Kit

Note; Hold Connecting Rod not to strike the crankcase mating surface while press fitting.

Special Tool;
Crank Assy Tool Kit

1/8 plug (塞子)

3-2) Install 1/8 plug in position.

T.T.	12±3N·m

(Allen wrench) T.T. ; Tightening Torque

3-3) Attach Reverse Arm CP onto crankcase 1.
Retain the Reverse Arm CP with washer and snap ring from the outside of crankcase 1.

Note; Be sure not to damage oil seal.
Make sure the snap ring is in the groove without fail.

3-4) On plastic container, place crankcase 1 with the mating surface upwards.
Install Balancer Shaft with the markings between Drive Gear of Crankshaft and Driven Gear of Balancer Shaft aligned.

Mating markings

Crankshaft

Balance Shaft
(平衡齿轮)

3-5) Install Reverse Shaft CP.

3-6) Install Main Shaft Assy and Counter Shaft Assy with gears engaged into crankcase 1.

Note; Pay attention not to miss washer fitting to Counter Shaft.
Be sure not to damage the lip portion of oil seal by the Counter Shaft end spline.

Counter Shaft

Main Shaft

3-7) Install Shifter Fork (Main), facing the ID marking "M" upwards, into the Groove of Main Shaft.

Install Shifter Fork (Right), facing the ID marking "R" upwards, into the upper groove of Counter Shaft.

Install Shifter Fork (Left), facing the ID marking "L" upwards, into the lower groove of Counter Shaft.

Shifter Fork (Right)

Shifter Fork (Left)

Shifter Fork (Main)

3-8) Install Shift Drum CP in the pin side upright condition.
Set each pin of Shift Forks into applicable groove of Shift Drum.

Shift Drum CP

Spring (Fork Shaft)

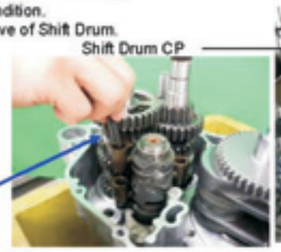

3-9) Insert Spring (Fork Shaft) into the hole (inner diameter; 11 mm) each of Shift Fork (Right) and (Left).

Insert Fork Shaft into Shift Fork (Right) and (Left).

Insert Fork Shaft into Shift Fork (Main).

Apply oil into the grooves of Fork Shaft and Shift Drum.
Turn Main Shaft and make sure that Counter Shaft, Shift Drum and Shift Fork can be smoothly operated.

Fork Shaft

3-10) (When replacing Bearing with new one) Install Stopper Plate.

Stopper Plate ; 1 pc. (Main shaft Bearing)
Faster ; M6 bolt (inner hexagon)

T.T.	13±1N·m

Stopper Plate B ; 2 pcs. (Shift Drum Bearing)
Fastener ; M6 bolt (inner hexagon)
Apply sealing agent Three Bond #1316 onto the thread portion.

T.T.	8±1N·m

Bearing Retainer Plate ; 1 pc.

Bearing Retainer Plate B ; 2pcs.

3-11) Install Drain Plug.

Fastener ; M16 bolt

T.T.	21.5±1.5N·m

Note; Make sure the gasket is in position.

3-12) Install Oil Strainer UN.

3-13) Place on the plastic containers so that the mating surface is up
Apply sealing agent evenly onto the mating surface to crankcase 1.

Sealing agent	Three Bond #1215

● Adjust the convex position on the end surface of Water Pump Shaft to meet with the groove on the end surface of Balancer Shaft (on Crankcase 1 side).

Make sure the washer is in position

Convex on the end surface of Water Pump Shaft

Groove on the end surface of Bearing Shaft

3-14) Cover Crankcase 2 over Crankcase 1, assemble cases by lightly and carefully tapping with hammer to fit mating surfaces properly, without decline.

Note; The groove of Balancer Shaft is moved with connecting rod rotated. Hold the connecting rod not to rotate.
Make sure the convex position is engaged with the groove of Bearing Shaft.

3-15) Tighten bolts to the specified tightening torque.

Crankcase 2
Faster ; M6 X 75L 1pc.

Crankcase 1
Fastener ; M6×40L 7 pcs.
M6×75L 7 pcs.
M6×50L 1 pc.

T.T.	10±1N·m

Note; Make sure the crankshaft is smoothly rotated after tightening bolts.

Crankcase 2

Crankcase 1

3-16) Install Position Switch.

Insert Spring (Point) into the hole on the end surface of Shift Drum. Then insert Point (Neutral) After that install Position Switch.

Fastener ; M5 X 20L 2 pcs.

T.T.	4±1N·m

Spring (point) first and Point (neutral)

Position Switch

3-17) Set the case assembly onto Special Tool, Engine Base Plate AY.

Special Tool ; Engine Base Plate AY

3-18) Apply TB #1344 to M6 thread portion of Reverse Arm Lever, and install along with Reverse Arm Spring.

Fastener ; M8 X 12L 1 pc.

T.T.	10±1N·m

(T-wrench : 8 mm)

Note; Make sure Reverse Arm Spring is in the correct potion.

Reverse Arm Lever

3-19) Apply TB #1316 to thread portion of Stopper Pin, and tighten to the specified tightening torque.

T.T.	23±3N·m

(Deep-type socket wrench)

3-20) Align the locator pin of Shift Drum at the groove of Shift Cam, and assemble and fix with Shifter Pin.

Note; Apply a proper amount of Three Bond #1316 onto the thread portion of Shifter Pin.

T.T.	23±3N·m

(Deep-type socket wrench : 12 mm)

Shifter Pin

Shifter Pin Shifter Cam

3-21) Install Stopper Arm CP and Spring (stopper).

Fastener ; M6 stepped bolt 1 pc.
Apply Three Bond #1344 to the thread portion.

T.T.	10±1N·m

(T-wrench : 10 mm)

Note; Make sure Spring (stopper) is in the correct position.

Stopper Arm CP

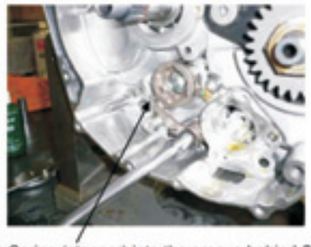

Hook Spring (stopper) into the groove behind Shift C

3-22) Assembly Oil Pump Assy as shown in the illustration in advance.

	部品名称	個数
①	OIL PUMP CASE 1	1
②	OIL PUMP CASE 2	1
③	INNER ROTOR (FEED)	1
④	OUTER ROTOR (FEED)	1
⑤	INNER ROTOR (SCAV.)	1
	OUTER ROTOR (SCAV.)	1
⑥	OIL PUMP SHAFT	1
⑦	DOWEL PIN	2
⑧		

① Insert shorter pin (φ3 X 15L) into the hole of Oil Pump Sha and then assemble with Inner Rotor (Scavenge).

② Set Pump Case 1 into Oil Pump Shaft.
Insert another shorter pin (φ3 X 15L) into the hole of Oil Pu

③ Assemble Outer Rotor (Feed) and Inner Rotor (Feed) with Pump Case 2, and apply oil into rotor chamber.

④ Set Oil Pump Shaft into Pump Case 2, fix Case 1 and 2 with two longer pins (φ3 X 19.8L).
Fit Outer Rotor (Scavenge).

Shorter pin

Shorter pin

● Apply oil into oil pump rotor chamber and install Oil Pump Assy.

Fastener ; M6 X 30L 3 pcs.

T.T.	10±1N·m

(T-wrench : 8 mm)

Note; Make sure oil pump shaft is smoothly rotated..

3-23) Assemble Drum Shifter and related parts as shown in the photo.

Make sure Ratchet pole is moved back by spring force and smoothly operated by tapping it.

Note; Make sure Ratchet pole A and B are in the correct position without fail.

Component parts of Drum Shifter

Drum Shifter assembled.

● Install Drum Shifter along with Guide Plate onto Shift Cam.

Fastener ; M6 X 20L 2 pcs.

T.T.	10±1N·m

(T-wrench : 10 mm)

Set Shifter Caller onto pin portion of Drum Shifter.

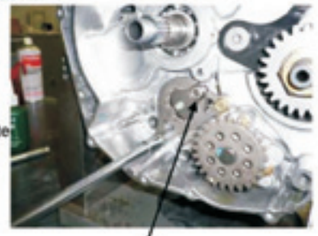

Shifter Caller

Snap Ring

Oil pump gear

3-24) Fit Oil Pump Gear and adopt snap ring into the groove on Oil Pump Shaft end. (Snap ring pliers)

3-25) Insert Shift Shaft CP with Special Tool; Oil Seal Guide adopted. Apply oil to Special Tool; Oil Seal Guide. Engage Stopper Pin and Shifter Collar into the groove of Shifter Lever

Note ; Be sure to install washer onto Shift Shaft CP.

Special Tool ; Oil Seal Guide

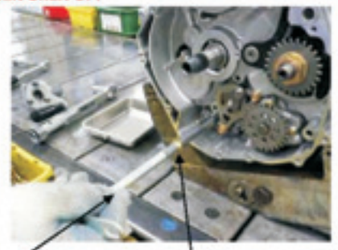

Shift Shaft CP

Washer

Shift Shaft assembled

● Take out Special Tool; Oil Seal Guide, temporally fit Shift Pedal CP and make sure gear shifting without fail.

Note ; Hold Shift Shaft CP not to moved out at temporally fitting Shift Pedal.

Hold Shift Shaft CP not to moved out at temporally fitting Shift Pedal.

● Also make sure reverse locking operation.

Make sure reverse locking operation.

3-26) Fit two Pipe Knocks and set Cylinder Gasket.

Pipe Knocks

Cylinder Gasket

3-27) Assemble and install Piston.

Set Piston Rings into Piston grooves;

- Expander Ring (upper and lower) into Oil Ring groove
- Second Ring, facing the marking upwards
- Top Ring, facing the marking upwards
- Make sure rings are smoothly moved and adjust the openings (gaps) at 120-degrees intervals.

Fit new clip into the groove on one side and make sure of the clip fitting properly in the groove.

Note ; Make sure the clip is in the groove.

Place Special Tool; Piston Support Plate.
Insert Piston, with the marking on the top surface faced to magneto side, into cylinder.

Apply oil to small end hole of Connection Rod, Piston Pin and hole. Then fit Piston Pin into Piston.

Fit new clip into the groove on another side and make sure the clip fitting properly in the groove.

Note ; Make sure the clip is in the groove.

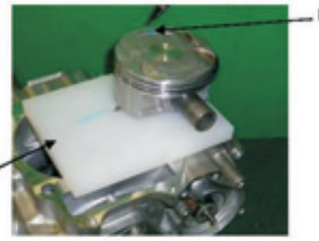

Marking be faced to MAG side

Special Tool ; Piston Support Plate

3-28) Apply oil around Piston and Rings, and cylinder bore.
Install Cylinder by holding Rings by Special Tool; Ring Band.
Make sure of the smooth operation by turning Crankshaft, with Cylinder pressed down by hand

Special Tool; Ring Band

3-29) Apply oil to O-ring and install Starter Motor in position.

Fastener ; M6 X 25L 2 pcs.

T.T.	10±1N·m

3-30) Install Chain Guide 1 onto Cylinder.

Chain Guide 1

3-31) Assemble Cylinder Head as shown in the illustration;

	部品名称	個数
①	SEAL-VALVE	4
②	INTAKE VALVE	2
③	EXHAUST VALVE	2
④	VALVE SPRING（INNER）	4
⑤	VALVE SPRING（OUTER）	4
⑥	SPRING RETAINER	4
⑦	COLLET（VALVE）	8
⑧	SEAT（VALVE SPRING）	4

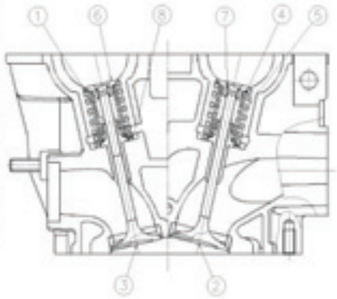

① Press-fit Seal (Valve) by means of exclusive tool

Note ; Make sure the appearance of Seal (Valve);

IN side ; Black

EX side ; Green

② Apply oil onto the shaft ends of IN and EX Valve, Valve Guide and Seal (Valve) and fit the valves into Cylinder Head.

Note ; Be sure to install IN and EX Vale in the correct position.

③ Fit Seat (Valve Spring) not to over-ride the step

④ Set Valve Spring (Inner), facing the green paint marking upwards

⑤ Set Valve Spring (Outer), facing the yellow paint marking upwards

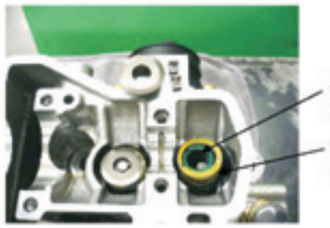

⑥ Fit Spring Retainer and Collet onto valve shaft end, while depressing Valve Springs with Special Tool; Valve ASSY Tool.

Note ; Make sure Valve Retainer is fit with Collet properly. Never depress Valve Spring excessively.

⑦ Fit Adjusting Pad and Valve Lifter onto each valve.

Note ; Adjusting Pad and Valve Lifter are fit in the original position.

3-32) Fit two pipe knocks and Head Gasket.

3-33) Install Cylinder Head.

Apply oil to M11 thread portion and washer, then tighten them in the following procedure.

Fastener ; M11 X 198L 4 pcs. (Socket wrench ; 14 mm)

	Tightening procedure
Tighten bolts in an even, crisscross pattern.	
①	Tighten to 30 N-m.
②	Tighten to 70 N-m.
③	Loose by 180-degrees
④	Loose by 180-degrees
⑤	Tighten to 35 N-m
⑥	Turn by 80 to 90-degrees clockwise.
⑦	Turn by additional 80 to 90-degrees clockwise

Tighten M6 bolts.

Fastener ; M6 X 140L 2 pcs. (Socket wrench ; 8 mm)

T.T.	10±1N·m

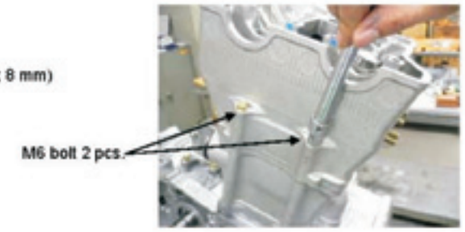

3-34) Fit Spacer with the chamfer side inwards onto Crankshaft on the magneto side.

Apply Three Bond #1306 and remove oil from the taper portion of Crankshaft.

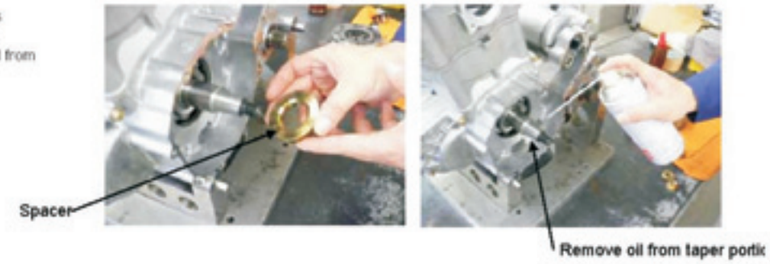

3-35) Fit Needle Bearing and apply grease.

Not to apply grease onto the taper portion.

① Install One-way Clutch onto Flywheel.

Fastener ; M6 X 16L 8 pcs.
Apply Three Bond #1316.

T.T.	14±1N·m

(Allen wrench : 4 mm)

Attach Stator Gear.
Make sure Stator Gear smoothly rotates counterclockwise.

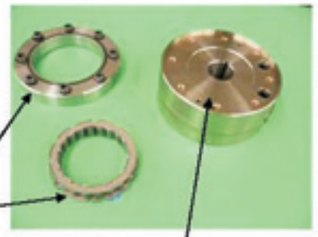

3-36) Apply TB #1306 and remove oil from taper hole of Flywhe·Fit Flywheel, apply oil to threads and retaining surface of M14 nut Tighten the nut to the specified tightening torque, with Special Tool, Wrench (Counter Shaft) adopted to Crankshaft for preventing rotation.

Fastener ; M14 nut 1 pc.

T.T.	160±10N·m

(Socket wrench : 19 mm)

Special Tool ; Wrench (Counter Shaft)

3-37) Install Chain Lever with pivot bolt.

Fastener ; M8 X 22.5L Pivot bolt 1 pc.

T.T.	15±1.5N·m

(Allen wrench ; 6 mm)

3-38) Put Timing Chain from the Cylinder Head side.
Fit Crank Sprocket with the chamfer portion inside and with each spline aligned into Crankshaft.

Crank Sprocket

● Align the Crank Sprocket marking with Timing (Brass) Plate on Chain.

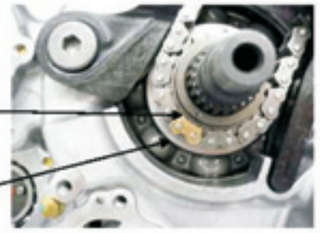

3-39) Apply oil to Camshafts and install them in position so that the Timing Marks are aligned with the Timing (Brass) Plates on Chain.

Note : Be sure to install Camshaft (IN) CP and Camshaft (EX) CP in the correct position.

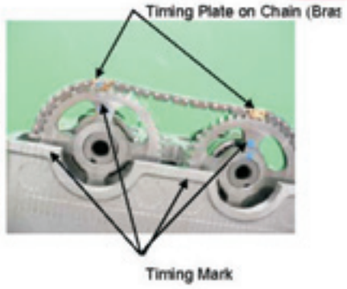

FIG Relation between Timing Mark and Timing (Brass) Plate at TDC

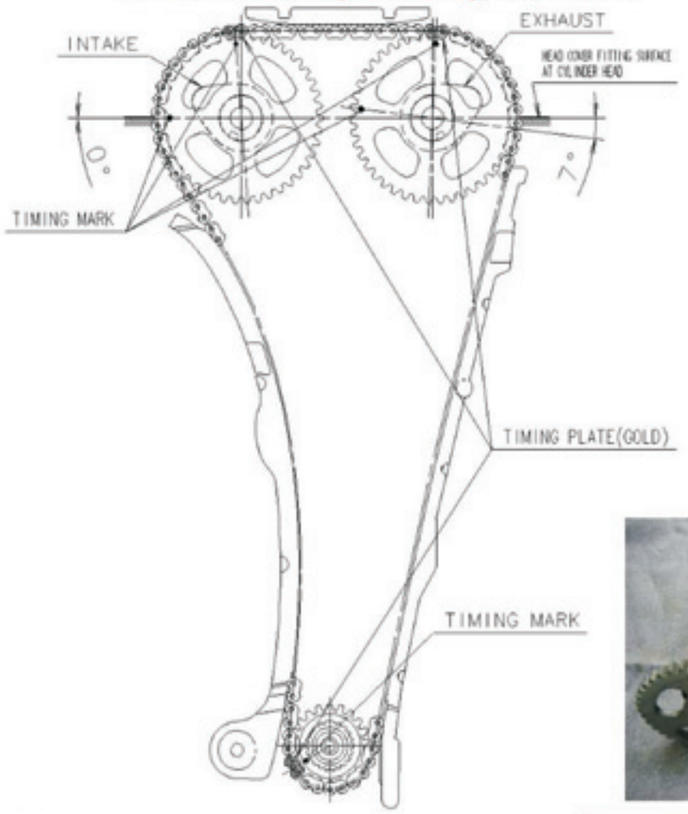

3-40) Fit Bearing Stopper onto Ball Bearing.

Clearance between Ball Bearing and Bearing Stopper ; Approx. 0.2 mm

3-41) Apply oil to Cam Support and install in position.
Tighten M6 bolts in an even, crisscross pattern.

Fastener ; M6 X 40L 8 pcs.

T.T.	10±1N·m

3-42) Depress Chain Tensioner plunger into the bottom position by Special Tool; Chain Tensioner Tool and install Tensioner ASSY along with Gasket (Tensioner).

Fastener ; M6 X 25L 2 pcs.

T.T.	10±1N·m

(T-wrench ; 8 mm)

3-43) Take out Special Tool and install bolt with Gasket (Aluminum).

Fastener ; M6 X 8L 1 pc.

T.T.	4.5~6N·m

(T-wrench ; 10 mm)

Make sure of smooth operation by turning Crankshaft.

3-44) Adjust valve clearance with thickness gauge adopted at TDC position on the following procedures

Valve Clearance (Cold condition)	
IN	0.15±0.05mm
EX	0.27±0.05mm

Adjusting Valve Clearance

① Temporally fit original Adjusting Pad, and check the valve clearance.
② In accordance with the matrix table (Attachment), make sure the relationship between checking results and listed figures (3 digits).
③ Select applicable Adjusting Pad and fit it in place with original one.
④ Check again valve clearance and make sure it is within the specifications.
⑤ If out of the specifications, repeat the procedures.
Finally make sure the valve clearance is within the specifications.

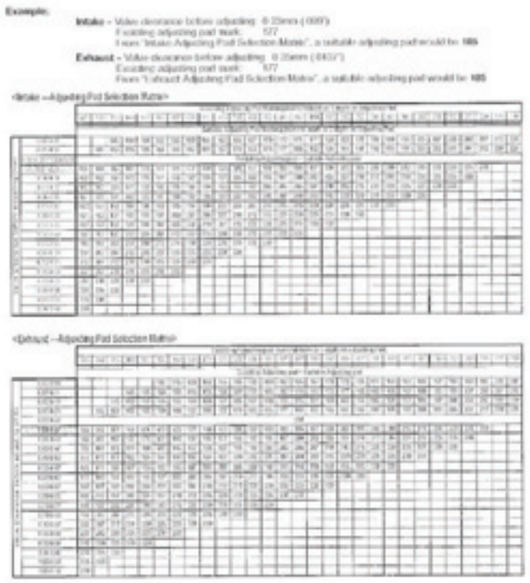

30/30参照

3-45) Fit One-way Valve

T.T.	18±3N·m

Note ; Make sure One-way Valve ASSY is pushed as far as it will go.

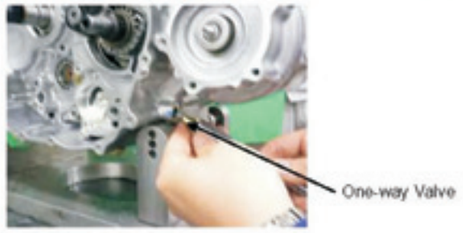

3-46) Fix Impeller along with Seal Washer by means of Special Tool, Wrench (Counter Shaft) adopted to Counter Shaft.

T.T.	10±1N·m

(T-wrench ; 12 mm)

3-47) Fit Water Pump Case along with Gasket (Water Pump).
Be sure to fit the cupper gasket at one place.

Fastener ; M6 X 25L 7 pcs.

T.T.	10±1N·m

(T-wrench ; 8 mm)

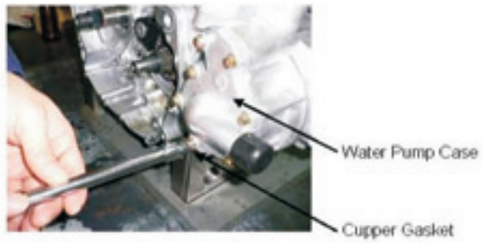

3-48) Install Primary Gear with the marking inside aligned to spline.

Fastener ; M18 nut 1 pc.

T.T.	120±10N·m

(Socket wrench ; 27 mm)

3-49) Fit Release Shaft along with Spring (Release) and Plate (Release) in position.

Fastener ; M6 X 20L 1 pc.

T.T.	10±1N·m

Note; Make sure Spring (Release) is in the correct position.

3-50) Prepare the component parts of Clutch ASSY.

Component parts of Clutch ASSY

3-51) Fit Distance Collar into Main Shaft, apply oil into hole and turn Collar by one-turn.

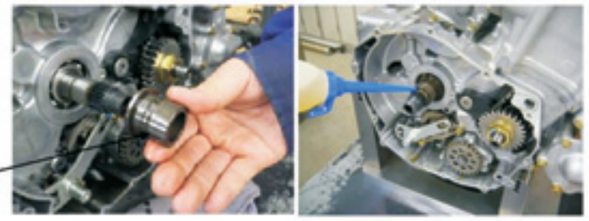

3-52) Fit Cultch Outer CP, lock washer with the hollow surface inwards and lock nut.

Fastener : M 18 Special nut 1 pc.

T.T.	100±10N·m

3-53) Caulk the lock nut with Special Tool; Caulking Tool.

3-54) Apply oil onto Push Rod and insert into Main Shaft,. and then fit Pusher

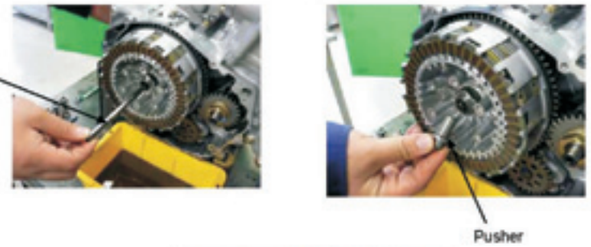

3-55) Fit Disk (Clutch) and Plate (Clutch)

Note ; Make sure the friction material applied area of the most inside Clutch Plate is the largest.
Attach the most outside Clutch Plate into the shallow depth groove of Clutch Outer CP.

Fit Disk (Clutch Pressure)

Fit Spring (Clutch) and tighten bolts evenly.

Fastener : M6 X 35L 6 pcs.

T.T.	10±1N·m

(Allen wrench ; 5 mm)

● Make sure again the tightening torque of Primary Gear fixing nut.

T.T.	120±10N·m

3-56) Attach Spring (Filter) onto Clutch Cover.
Fit Filter Cover along with Oil Filter CP and O-ring.

Fastener : M6 X 25L 2 pcs.

T.T.	10±1N·m

3-57) Fit Gasket (Clutch Cover) onto Crankcase after spot applying Three Bond #1215 onto the Crankcase surface.

Note ; Use the long bolt fixing Filter Cover and Clutch cover commonly.

Fastener ; M6 X 25L 11 pcs.
M6 x 65L 1 pc.

T.T.	10±1N·m

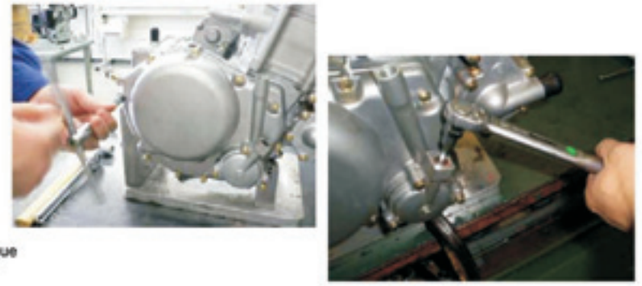

3-58) Tighten Filter Cover plug to the specified tightening torque

T.T.	20±3N·m

3-59) Install Thermostat with the hole upwards and Thermostat Cover

Fastener ; M6 X 20L 2 pcs.

T.T.	8±1N·m

3-60) Install Thermo Switch with Three Bond #1344 applied to threads

T.T.	35±3N·m

3-61) Install Spark Plug

T.T.	17.5±2.5N·m

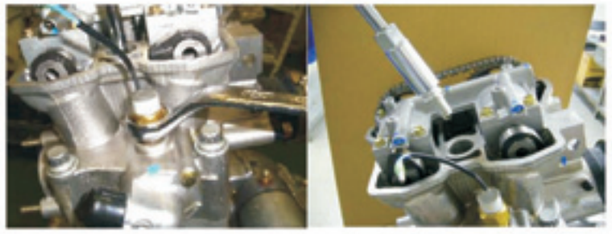

3-62) Apply grease around Shaft 1 and 2, and fit Reduction Gear 1 and 2 correspondingly.
Apply grease to gears.

Note; Make sure Shaft 1 and 2 are in the correct position.

3-63) Install Magneto Cover
① Fit Stator Coil into MAG Cover

Fastener ; M5 X 30L 3 pcs.
Apply Three Bond #1316.

T.T.	6±0.5N·m

② Route the coil wiring along the groove and fix Pulsar Coil over the wiring.

Fastener ; M5 X 12L Screw 2 pcs.

T.T.	3±0.5N·m

3-64) Fit Gasket (MAG Cover) onto Crankcase after spot applying Three Bond #1215 onto the Crankcase surface.
Fit MAG Cover and tighten bolts.

Fastener ; M6 X 35L 11 pcs.

T.T.	10±1N·m

● Fit Plug 1 and 2 (MAG Cover).

T.T. Plug 1	11±1N·m
T.T. Plug 2	4±1N·m

Note ; Make sure O-ring is attached Plug (MAG Cover)
Route the harness under the Pulsar Coil and set the Grommet into the groove.

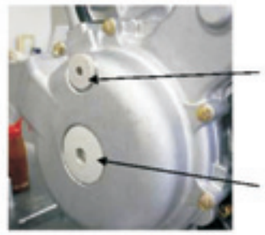

3-65) Fit Oil Delivery Pipe

T.T.	18±3N·m

Note ; Fit Gasket onto both side of Banjo bolt.
Arrange the rubber pipe in upright position.

3-66) Make sure O-ring (Head Cover) and Chain Guide 2 furnished and fit Head Cover.
Fit rubber mount and bolts.

T.T.	10±1N·m

3-67) Install Adapter with convex portion upwards

Fastener ; M8 X 20L 2 pcs.

T.T.	18±2N·m

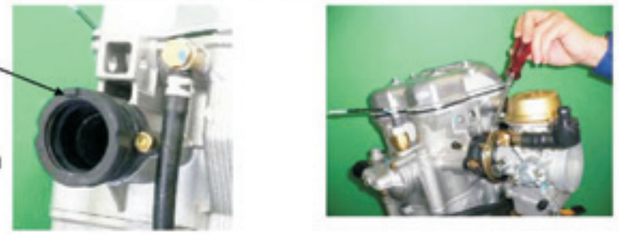

-68) Install carburetor onto Adapter.
Place Adapter band screw with the screw head upwards on MAG side.

Fastener ; M4 X 30L screw 1 pc.

3-69) Fit Shift Pedal with the markings aligned.

Fastener ; M6 X 25L 1 pc.

T.T.	10±1N·m

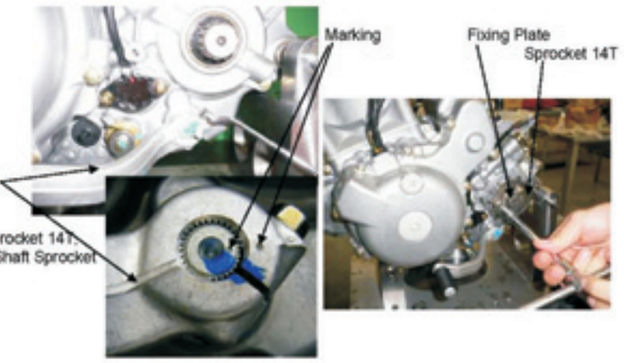

3-70) Apply grease onto front and rear surfaces of Sprocket 14T and install it in position. Apply grease Counter Shaft Sprocket and install Fixing Plate over the sprocket.

Fastener ; M6 X 12L 2 pcs.

T.T.	10±1N·m

1. Measure valve clearance at TDC (Compression stroke) using thickness gauge with original adjusting pad installed.
2. Reference the measurement ant the 3 digits marked on the existing adjusting pad on the matrix below.
3. Select a suitable adjusting pad from the matrix below and replace existing pad.
4. Measure and confirm that valve clearance is within the standard values.
5. If valve clearance is not within stadard, reverify step#1 and repeat procedures again.

Example:

Intake- Valve clearance before adjusting: 0.23mm (.009")
Existing adjusting pad mark: 177
From "Intake Adjusting Pad Selection Matrix", a suitable adjusting pad would be 185

Exhaust- Valve clearance before adjusting: 0.35mm (.0137")
Existing adjusting pad mark: 177
From "Intake Adjusting Pad Selection Matrix", a suitable adjusting pad would be 185

<Intake - Adjusting pad selection matrix>

	Exsisting Adjusting pad marking (numeral mark w/3 digits on Adjusting pad)																												
現在	145	150	155	160	162	165	167	170	172	175	177	180	182	185	187	190	192	195	197	200	202	205	207	210	212	215	220	225	230
Valve Clearance before adjusting (mm)	Suitable Adjusting pad marking (numeral mark w/3 digits on Adjusting pad																												
0.00-0.04			145	150	150	155	155	160	160	162	165	167	170	172	175	177	180	182	185	187	190	192	195	197	200	202	207	212	220
0.05-0.09		145	150	155	155	160	160	162	165	167	170	172	175	177	180	182	185	187	190	192	195	197	200	202	205	207	212	220	225
0.10-0.20 (=standard)	Exsisting Adjusting pad = Suitable Adjusting pad																												
0.21-0.25	155	160	162	167	170	172	175	177	180	182	185	187	190	192	195	197	200	202	205	207	210	212	215	220	220	225	230		
0.26-0.30	160	162	167	172	175	177	180	182	185	187	190	192	195	197	200	202	205	207	210	212	215	220	220	225	225	230			
0.31-0.35	162	167	172	177	180	182	185	187	190	192	195	197	200	202	205	207	210	212	215	220	220	225	225	230	230				
0.36-0.40	167	172	177	182	185	187	190	192	195	197	200	202	205	207	210	212	215	220	220	225	225	230	230						
0.41-0.45	172	177	182	187	190	192	195	197	200	202	205	207	210	212	215	220	220	225	225	230	230								
0.46-0.50	177	182	187	192	195	197	200	202	205	207	210	212	215	220	220	225	225	230	230										
0.51-0.55	182	187	192	197	200	202	205	207	210	212	215	220	220	225	225	230	230												
0.56-0.60	187	192	197	202	205	207	210	212	215	220	220	225	225	230	230														
0.61-0.65	192	197	202	207	210	212	215	220	220	225	225	230	230																
0.66-0.70	197	202	207	212	215	220	220	225	225	230	230																		
0.71-0.75	202	207	212	220	220	225	225	230	230																				
0.76-0.80	207	212	220	225	225	230	230																						
0.81-0.85	212	220	225	230	230																								
0.86-0.90	220	225	230																										
0.91-0.95	225	230																											
0.96-100	230																												

<Exhaust - Adjusting pad selection matrix>

	Exsisting Adjusting pad marking (numeral mark w/3 digits on Adjusting pad)																												
現在	145	150	155	160	162	165	167	170	172	175	177	180	182	185	187	190	192	195	197	200	202	205	207	210	212	215	220	225	230
Valve Clearance before adjusting (mm)	Exsisting Adjusting pad = Suitable Adjusting pad																												
0.02-0.06						145	145	150	150	155	155	160	160	162	165	167	170	172	175	177	180	182	185	187	190	192	197	202	207
0.07-0.11				145	145	150	150	155	155	160	160	162	165	167	170	172	175	177	180	182	185	187	190	192	195	197	202	207	212
0.12-0.16			145	150	150	155	155	160	160	162	165	167	170	172	175	177	180	182	185	187	190	192	195	197	200	202	207	212	220
0.17-0.21		145	150	155	155	160	160	162	165	167	170	172	175	177	180	182	185	187	190	192	195	197	200	202	205	207	212	220	225
0.22-0.32	Std																												
0.33-0.37	155	160	162	167	170	172	175	177	180	182	185	187	190	192	195	197	200	202	205	207	210	212	215	220	220	225	230		
0.38-0.42	160	162	167	172	175	177	180	182	185	187	190	192	195	197	200	202	205	207	210	212	215	220	220	225	225	230			
0.43-0.47	162	167	172	177	180	182	185	187	190	192	195	197	200	202	205	207	210	212	215	220	220	225	225	230	230				
0.48-0.52	167	172	177	182	185	187	190	192	195	197	200	202	205	207	210	212	215	220	220	225	225	230	230						
0.53-0.57	172	177	182	187	190	192	195	197	200	202	205	207	210	212	215	220	220	225	225	230	230								
0.58-0.62	177	182	187	192	195	197	200	202	205	207	210	212	215	220	220	225	225	230	230										
0.63-0.67	182	187	192	197	200	202	205	207	210	212	215	220	220	225	225	230	230												
0.68-0.72	187	192	197	202	205	207	210	212	215	220	220	225	225	230	230														
0.73-0.77	192	197	202	207	210	212	215	220	220	225	225	230	230																
0.78-0.82	197	202	207	212	215	220	220	225	225	230	230																		
0.83-0.87	202	207	212	220	220	225	225	230	230																				
0.88-0.92	207	212	220	225	225	230	230																						
0.93-0.97	212	220	225	230	230																								
0.98-1.02	220	225	230																										
1.03-1.07	225	230																											
1.08-1.12	230																												

EXHAUST MUFFLER 排氣管

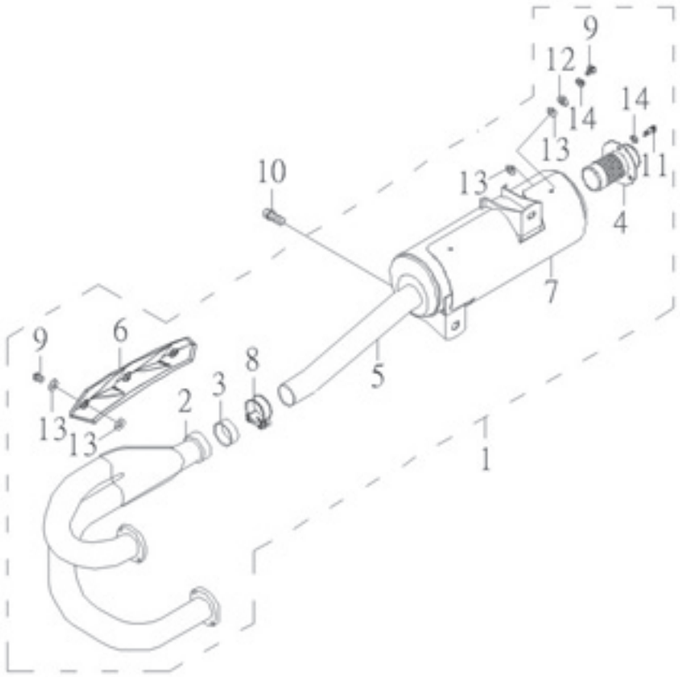

NO.	PARTS NO.	PARTS NAME		Q'TY	NOTE
1	31610-CGV-00	EXHAUST MUFFLER ASS'Y	排氣管總成	1	
	31610-CGV-00C	EXHAUST MUFFLER ASS'Y	排氣管總成	1	認證
2	31611-CGV-00	PIPE, EXHAUST	排氣導管	1	
	31611-CGV-00C	PIPE, EXHAUST	排氣導管	1	認證
3	31614-CGV-00	GASKET, MUFFLER	消音筒墊片	1	
4	31616-CGV-00	**ARRESTOR, SPARK □25**	火花捕捉器	1	
	31616-CGV-00C	**ARRESTOR, SPARK □15**	火花捕捉器	1	認證
5	31617-CGV-00	MUFFLER COMP	消音筒	1	
6	31618-CEW-00	PROTECTOR, EXHAUST	排氣管護罩	1	
7	31619-CGV-00	PROTECTOR, ELIMINATOR	消音筒護罩	1	
8	31624-CGV-00	CLIP	消音筒管束	1	
9	96316-06010-K	SCREW, PAN HEAD	十字孔頭螺絲	7	
10	96414-08016-B	BOLT, FLANGE	凸緣螺栓	1	
11	96510-06020-K	BOLT, SOCKET	六角承窩螺栓	3	
12	97201-061310-K	WASHER, PLATE 6*18*2.0	平面墊圈	4	
13	97210-061215	WASHER, PLATE	石棉墊圈	14	
14	97301-061112-K	WASHER, SPRING	彈簧墊圈	7	

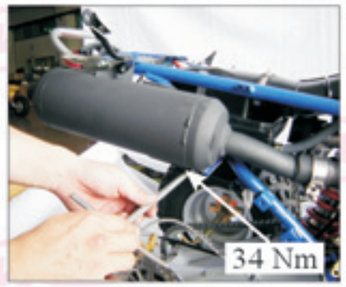

INTAKE 空氣吸入口

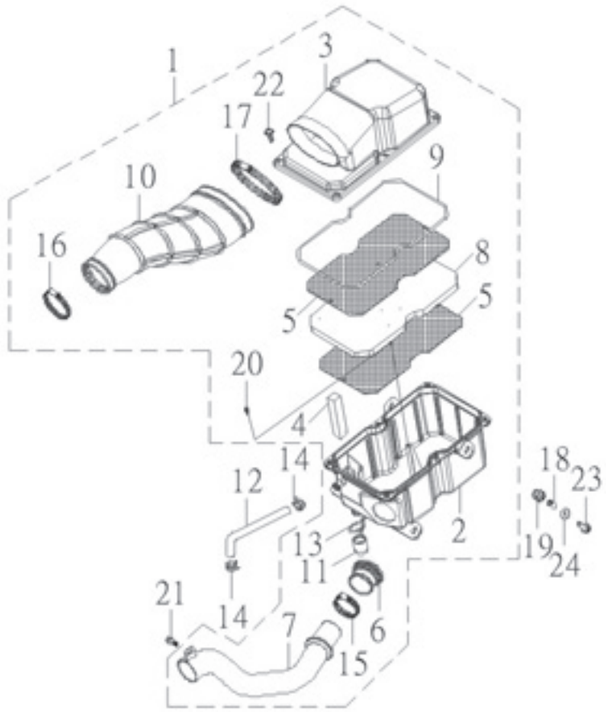

NO.	PARTS NO.	PARTS NAME		QTY	NOTE
1	13410-CGV-00	AIR CLEANER ASSEMBLY	空氣濾清器總成	1	
2	13411-CGV-00	CASE, AIR CLEANER	空氣濾清器箱	1	
3	13412-CGV-00	CAP, CLEANER CASE	空氣濾清器箱蓋	1	
4	13426-CGV-00	FILTER BREATHER	集油室空氣濾綿	1	
5	13433-CGV-00	PLATE, ELEMENT SET	濾清網固定板	2	
6	13436-CGV-00	RUBBER RING, DUCT	進氣管橡皮環	1	
7	13437-CGV-00	DUCT	進氣管	1	
8	13451-CGV-00	ELEMENT, AIR CLEANER	空氣濾清網	1	
9	13452-CGV-00	SEAL, AIR CLEANER COVER	濾清箱封圈	1	
10	13453-CGV-00	JOINT, AIR CLEANER	濾清箱接頭	1	
11	13492-CGV-00	CAP DRAIN	排水蓋	1	
12	15172-CGV-00	HOSE, BREATH	曲軸箱通氣管	1	
13	90210-16023-C	CLIP	管夾	1	
14	90220-12178-C	CLIP 12*17.8	板型管夾	2	
15	90280-127051	CLIP HC1 304SS	美式管夾	1	12.7*□23~□51
16	90281-090070	CLIP ZHC 304SS	斑馬式管夾	1	9*□50~□70
17	90281-120120	CLIP ZHC 304SS	斑馬式管夾	1	12*□100~□120
18	93510-071017-B	COLLAR	機油箱軸環	4	
19	93580-101919	GROMMET	機油箱套環	4	
20	96112-41218-K	SCREW, TAPPING	自攻螺絲	5	
21	96218-06016-B	BOLT, HEXAGON WITH WASHER	六角螺栓附墊圈	1	
22	96313-06020-K	SCREW, PAN HEAD WITH WASHER	十字孔頭螺絲附墊圈	6	
23	96414-06028-B	BOLT, FLANGE	凸緣螺栓	4	
24	97201-062220-B	WASHER, PLATE	平面墊圈	4	

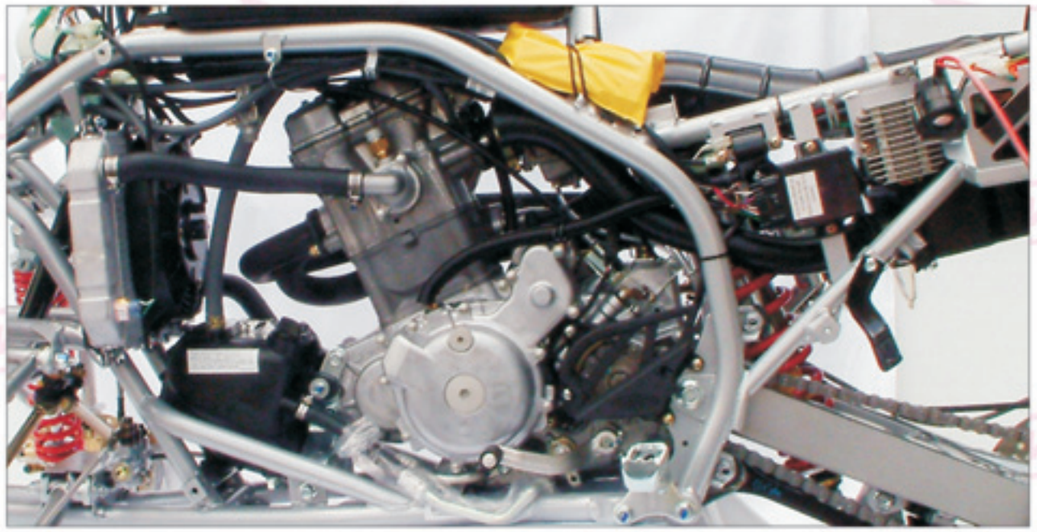

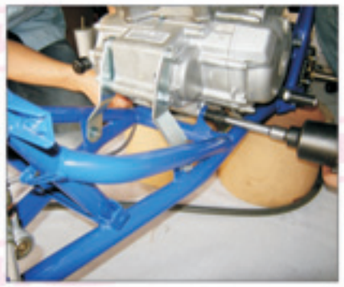

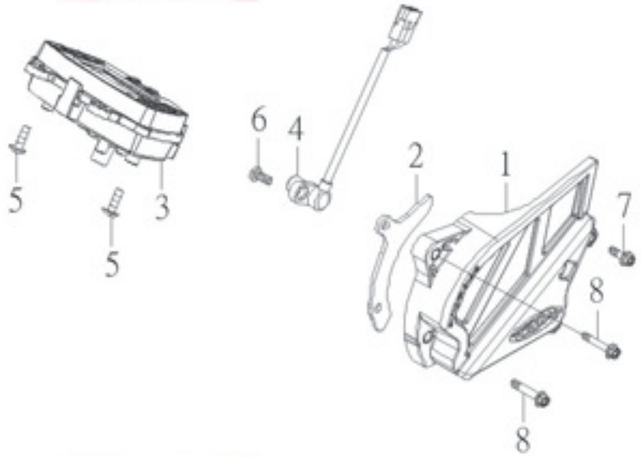

NO.	PARTS NO.	PARTS NAME		Q'TY	NOTE
1	32191-CGV-00	DRIVE CHAIN CASE	鏈條蓋	1	
2	32194-CGV-00	BRACKET, CHAIN CASE	鏈條蓋支架	1	
3	55510-CGV-00	SPEEDOMETER ASS'Y	速度表總成	1	
	55510-CGV-01	SPEEDOMETER ASS'Y	速度表總成	1	E-認證
4	61520-CGV-00	VELOCITY SENSOR	速度感應器	1	
5	96112-51616-K	SCREW, TAPPING	自攻螺絲	3	
6	96310-06012-C	SCREW, PAN HEAD	十字孔頭螺絲	1	
7	96411-06016-B	BOLT, FLANGE	凸緣螺栓	2	
8	96411-06025-B	BOLT, FLANGE	凸緣螺栓	2	

CARBURETOR 化油器

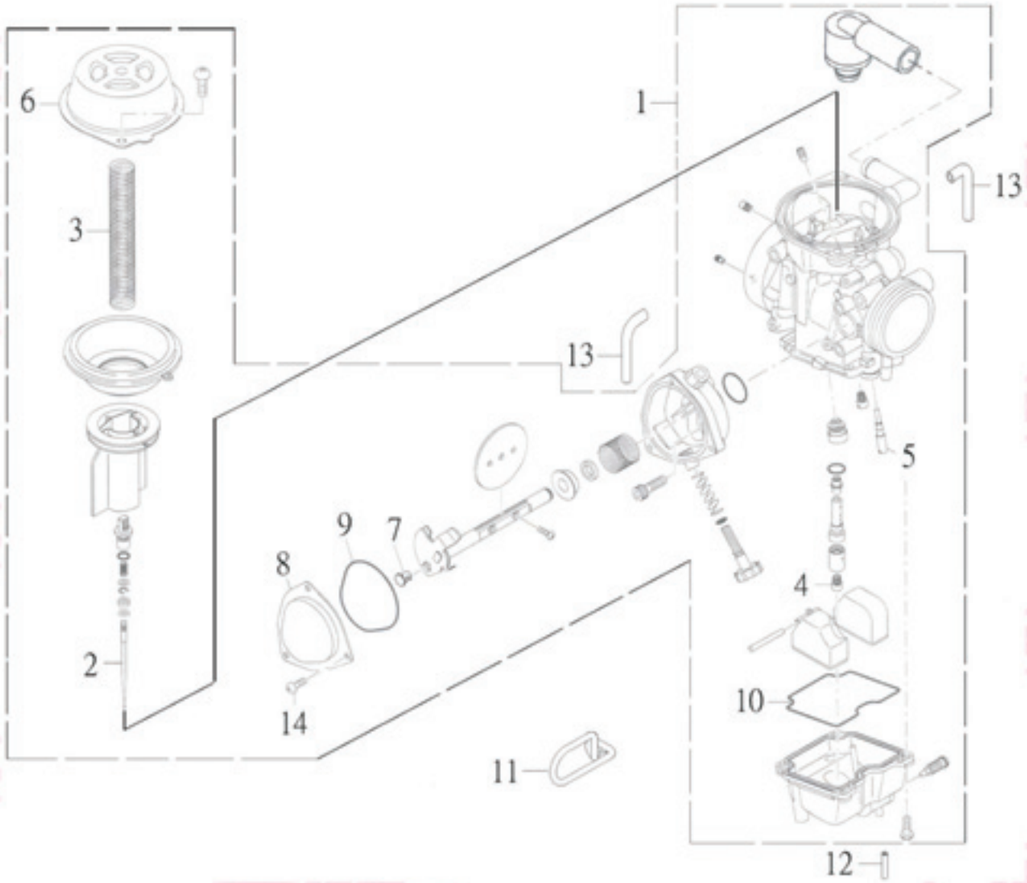

NO.	PARTS NO.	PARTS NAME		QTY	NOTE
1	13201-CGV-00	CARBURETOR ASSEMBLY	化油器總成	1	
	13201-CGV-01	CARBURETOR ASSEMBLY	化油器總成	1	E認證
2	13211-CGV-00	NEEDLE SET	油針	1	
	13211-CGV-01	NEEDLE SET	油針	1	E認證
3	13233-CGV-00	SPRING, COMPRESSION COIL	節流閥彈簧	1	
4	13240-CGV-00	JET, MAIN #147.5	主噴口	1	
	13240-CGV-01	JET, MAIN #135	主噴口	1	E認證
5	13242-CGV-00	JET, PILOT #45	引導噴口	1	
6	13258-CGV-00	TOP COMP	真空活塞閥蓋	1	
7	13261-CGV-00	CABLE GUIDE	鋼索導塊	1	
8	13276-CGV-00	COVER	節流閥蓋	1	
9	13296-CGV-00	SEAL	封圈	1	
10	13297-CGV-00	SEAL	封圈	1	
11	61393-URO-00	HOLDER, CABLE	鋼索固定座	1	
12	90311-35050500	TUBE	洩油管	1	
13	90311-65095500	TUBE	通氣管	2	
14	96310-04008-B	SCREW, PAN HEAD	十字孔頭螺絲	3	

FUEL TANK 油箱

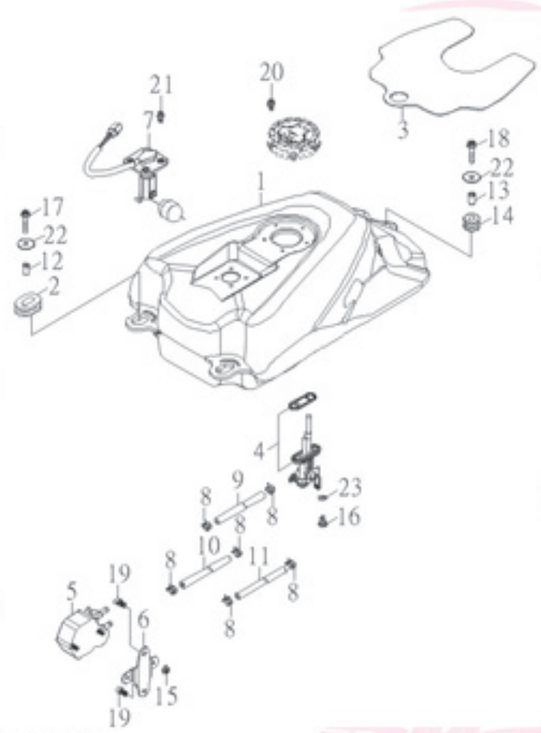

NO.	PARTS NO.	PARTS NAME		QTY	NOTE
1	43110-CGV-00	FUEL TANK	汽油箱	1	
2	43151-RAM-00	GROMMET F	油箱套環	2	
3	43154-CGV-00	GUARD	保護板	1	
4	43500-CBT-00	FUEL COCK ASS'Y	油杯	1	
5	43550-CGV-01	FUEL PUMP	汽油泵	1	
6	43556-CGV-00	OIL STEADY	汽油泵座	1	
7	62770-CEW-00	SENDER UNIT ASSEMBLY	汽油油面感應器	1	
	62770-CEW-01	SENDER UNIT ASSEMBLY	汽油油面感應器	1	
8	90220-08100-B	CLIP	板型管夾	6	
9	90310-50520	HOSE 5*520	負壓管	1	
10	90310-60170	HOSE 6*170	汽油管	1	
11	90310-60650	HOSE 6*650	汽油管	1	
12	93510-061015-B	COLLAR F	油箱隔管	2	
13	93510-061021-B	COLLAR R	油箱隔管	1	
14	93580-102416	GROMMET R	油箱套環	1	
15	95401-050805-B	NUT, FLANGE	凸緣螺帽	2	
16	96318-06012-G	SCREW, PAN HEAD	十字孔頭螺絲	2	
17	96414-06025-B	BOLT, FLANGE	凸緣螺栓	2	
18	96414-06032-B	BOLT, FLANGE	凸緣螺栓	1	
19	96510-06012-K	BOLT, SOCKET	六角承窩螺栓	2	
20	96612-05012-B	BOLT, HEXAGON WITH WASHER	六角十字穴螺栓附墊圈	5	
21	96612-05012-C	BOLT, HEXAGON WITH WASHER	六角十字穴螺栓附墊圈	4	
22	97201-062220-B	WASHER, PLATE	平面墊圈	3	
23	97210-061315	WASHER, PLATE	石棉墊圈	2	

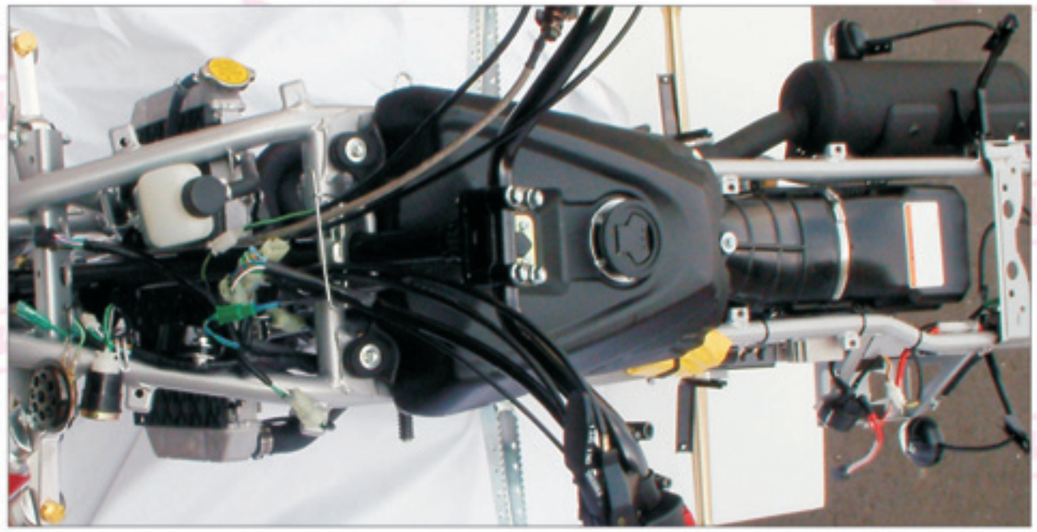

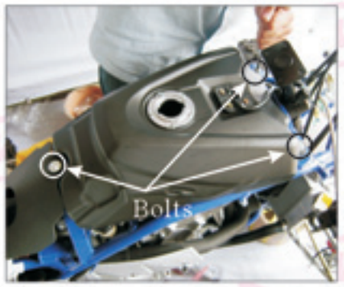

FRONT FENDER 前土除

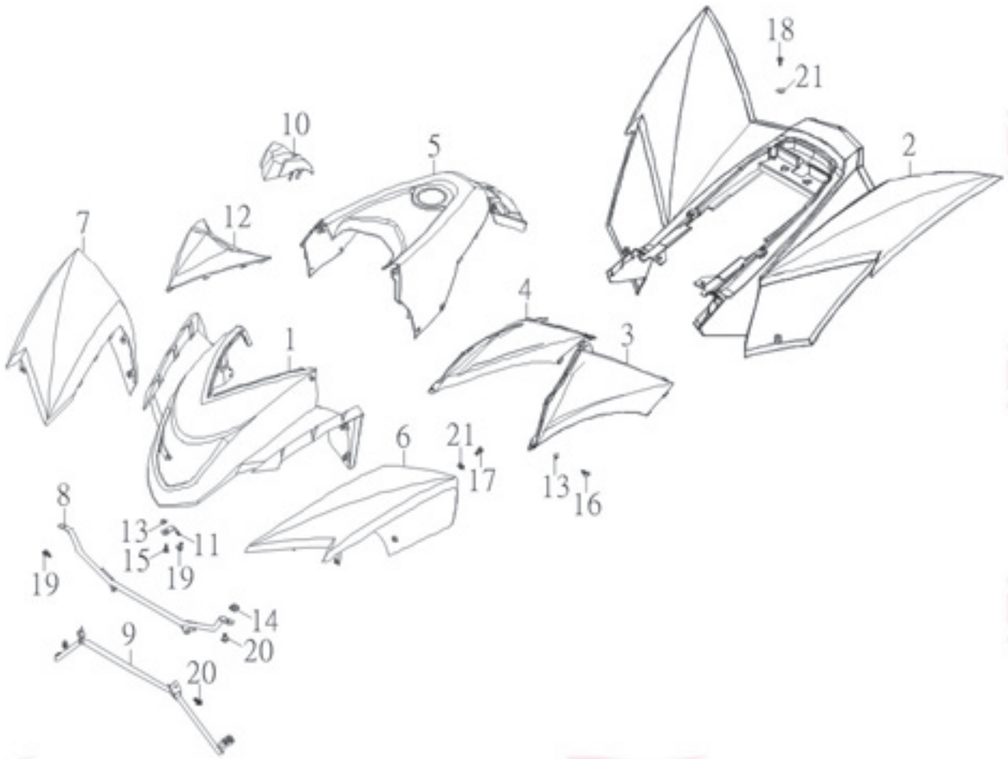

NO.	PARTS NO.	PARTS NAME		Q'TY	NOTE
1	51151-CGW-00	PANEL, FRONT	前燈座	1	
2	51171-CGV-00	COVER, SIDE	後蓋	1	
3	51172-CGW-00	SIDE COVER L	左側蓋	1	
4	51173-CGW-00	SIDE COVER R	右側蓋	1	
5	51532-CGV-00	COVER, TOP	油箱上蓋	1	
6	51552-CGW-00	FENDER, FRONT L	左前土除	1	
7	51553-CGW-00	FENDER, FRONT R	右前土除	1	
8	51554-CGV-00	STAY, FENDER UPPER	前蓋固定座上	1	
9	51556-CGV-00	STAY, FENDER LOWER	前蓋固定座下	1	
10	55213-CGW-00	PROTECTOR, HANDLEBAR	把手上蓋	1	
11	55315-STG-00	STAY, HEAD LIGHT	前燈固定片	1	
12	55516-CGW-00	HOLDER, SPEEDOMETER	速度表固定座	1	
13	95101-05012	NUT, SPRING	U型板螺帽	21	
14	95101-061820-C	NUT, SPRING	U型板螺帽	2	
15	96108-51216-K	SCREW, TAPPING	自攻螺絲	1	
16	96112-51216-K	SCREW, TAPPING	自攻螺絲	16	
17	96318-06012-G	SCREW, PAN HEAD	十字孔頭螺絲	2	
18	96318-06015-G	SCREW, PAN HEAD	十字孔頭螺絲	6	
19	96414-06012-B	BOLT, FLANGE	凸緣螺栓	3	
20	96414-06016-B	BOLT, FLANGE	凸緣螺栓	4	
21	97321-061825-G	WASHER, FLANGE	凸緣墊圈	8	

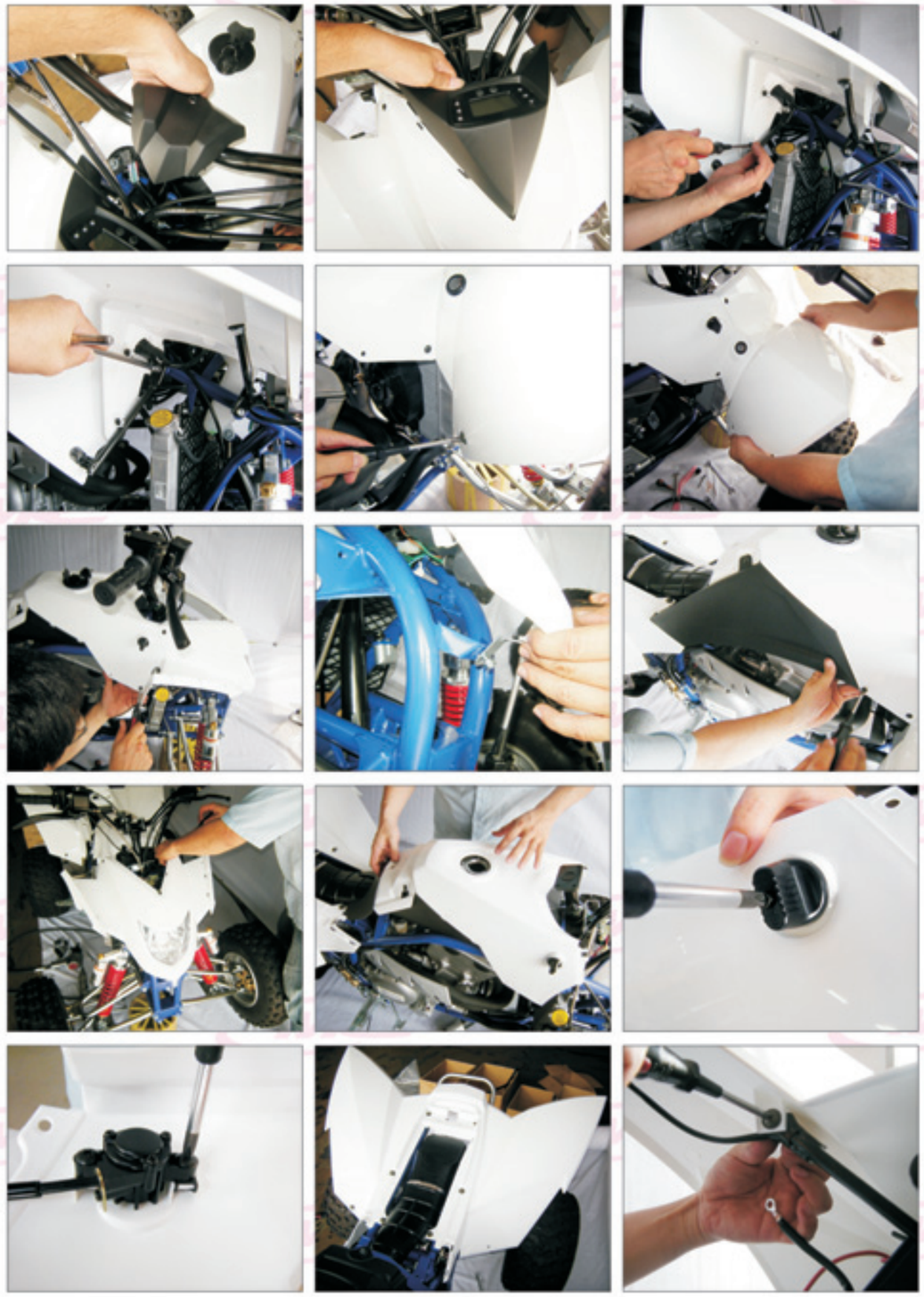

STAND FOOTREST 腳踏桿

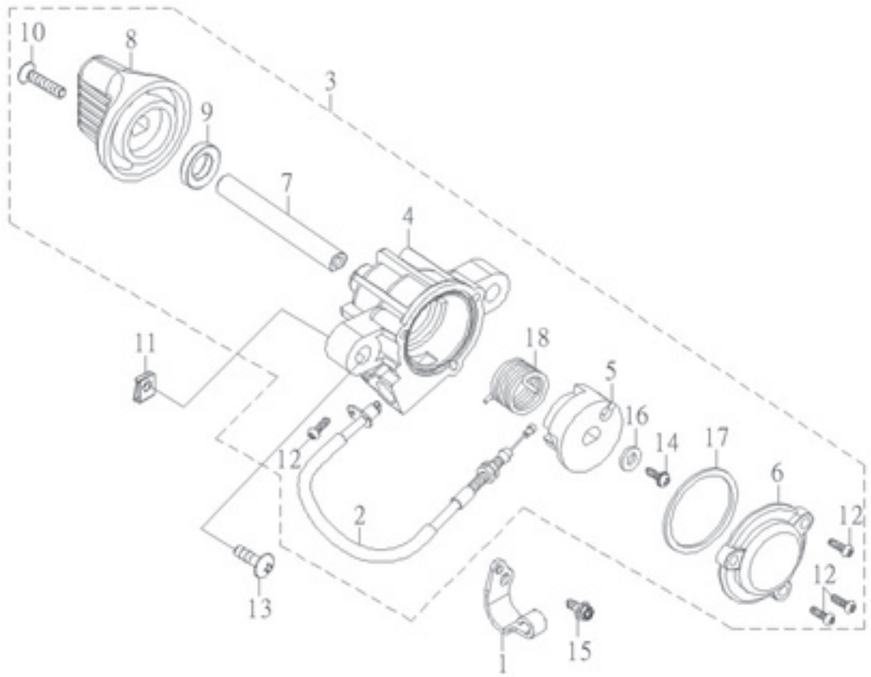

NO.	PARTS NO.	PARTS NAME		Q'TY	NOTE
1	24201-CGV-00	HOLDER, GEAR CABLE	排檔鋼索固定座	1	
2	61920-CGV-00	CABLE REVERSE	倒檔鋼索	1	
3	61960-CGV-00	REVERSE RELEASE SWITCH ASS'Y	倒檔釋放鈕總成	1	
4	61961-CGV-00	HULL	釋放鈕本體	1	
5	61962-CGV-00	SLIDER	釋放鈕滑塊	1	
6	61963-CGV-00	COVER	釋放鈕底蓋	1	
7	61964-CGV-00	SHAFT	釋放鈕心軸	1	
8	61965-CGV-00	KNOB	釋放鈕旋鈕	1	
9	93110-09154	OIL SEAL SD 9*15*4	油封	1	
10	94712-03015-K	SCREW, FLAT HEAD	十字孔埋頭螺絲	1	
11	95101-05012	NUT, SPRING	U型板螺帽	2	
12	96110-31224-K	SCREW, TAPPING	自攻螺絲	4	
13	96112-51616-K	SCREW, TAPPING	自攻螺絲	2	
14	96312-03008-B	SCREW, PAN HEAD WITH WASHER	十字孔頭螺絲附墊圈	1	
15	96414-06016-B	BOLT, FLANGE	凸緣螺栓	1	
16	97201-030810-B	WASHER, PLANE	平面墊圈	1	
17	97220-222610	WASHER	釋放鈕封圈	1	
18	97510-1210090-B	SPRING	扭轉彈簧	1	

STAND FOOTREST 腳踏桿

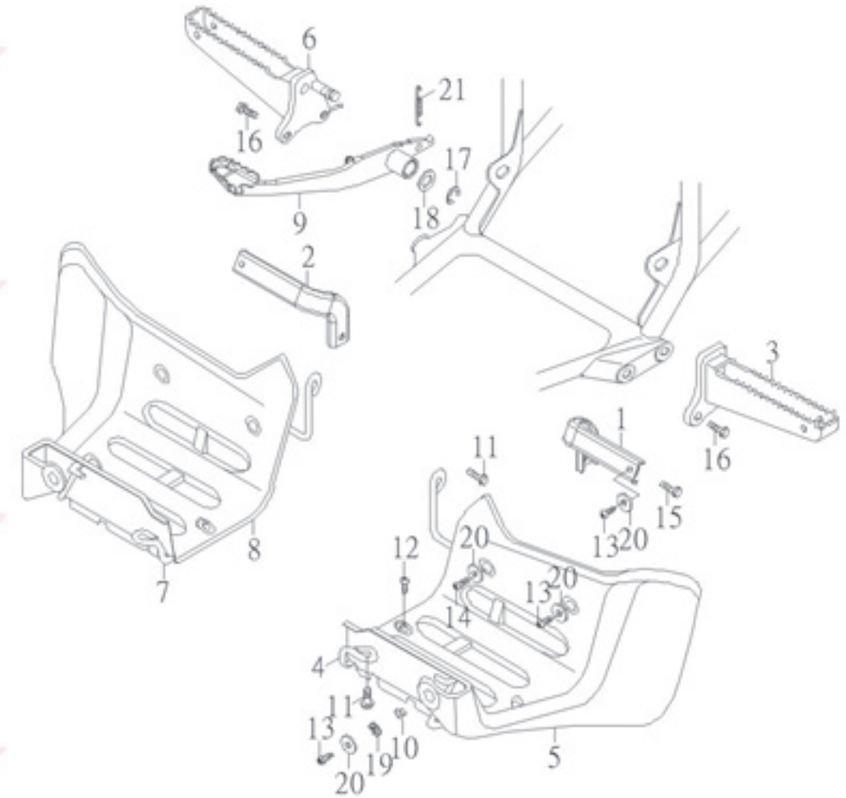

NO.	PARTS NO.	PARTS NAME		Q'TY	NOTE
1	51177-CGW-00	STAY COVER L	後蓋前固定座左	1	
2	51178-CGW-00	STAY COVER R	後蓋前固定座右	1	
3	53231-CEW-00	FOOTREST L	左腳踏桿	1	
4	53233-CEW-00	MUDGUARD STAY	左擋泥板架	1	
5	53234-RAM-00	MUDGUARD L	左擋泥板	1	
6	53241-CBS-00	FOOTREST R	右腳踏桿	1	
7	53243-CEW-00	MUDGUARD STAY	右擋泥板架	1	
8	53244-RAM-00	MUDGUARD R	右擋泥板	1	
9	53261-CGV-00	PEDAL, BRAKE	後剎車踏板	1	
10	95401-061006-B	NUT, FLANGE	凸緣螺帽	2	
11	96214-06020-B	BOLT, HEXAGON WITH WASHER	六角螺栓附墊圈	4	
12	96318-06012-G	SCREW, PAN HEAD	十字孔頭螺絲	4	
13	96318-06015-G	SCREW, PAN HEAD	十字孔頭螺絲	6	
14	96318-06020-G	SCREW, PAN HEAD	十字孔頭螺絲	2	
15	96414-06012-B	BOLT, FLANGE	凸緣螺栓	2	
16	96414-10025-B	BOLT, FLANGE	凸緣螺栓	4	
17	97011-12010-B	CIRCLIP 12*1.0	E形扣環	1	
18	97201-152620-B	WASHER, PLANE 15.2*25.6*2.0	平面墊圈	1	
19	97301-061215-B	WASHER, SPRING	彈簧墊圈	2	
20	97321-061825-G	WASHER, FLANGE	凸緣墊圈	8	
21	97506-14050-B	SPRING, TENSION	後剎車拉伸彈簧	1	

SEAT 座墊

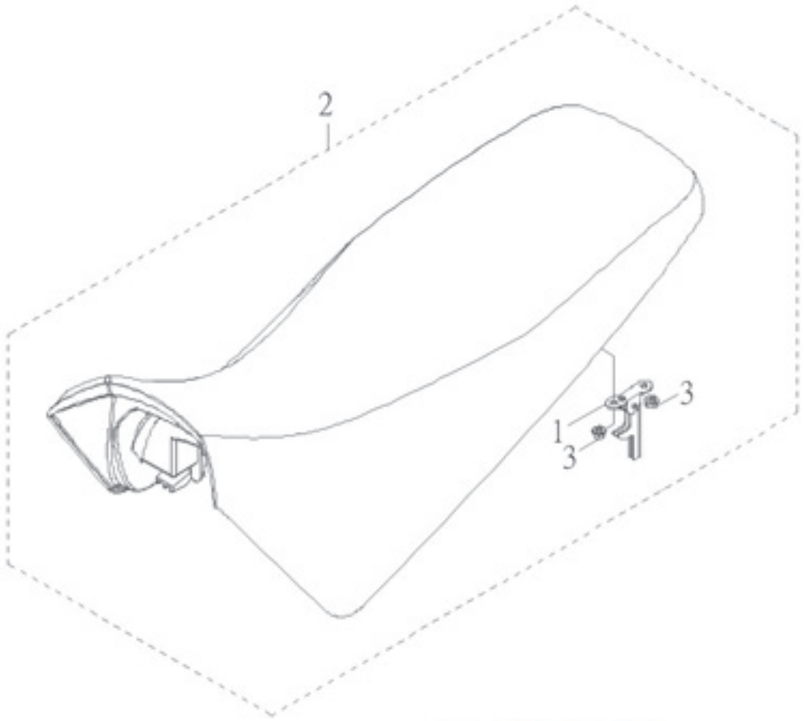

NO.	PARTS NO.	PARTS NAME		QTY	NOTE
1	52710-RAM-00	CATCH COMP, SEAT	座墊扣鉤組	1	
2	52730-CDW-00	SEAT ASS'Y	座墊總成	1	
3	95401-061006-C	NUT, FLANGE	凸緣螺帽	2	

STEERING 轉向裝置

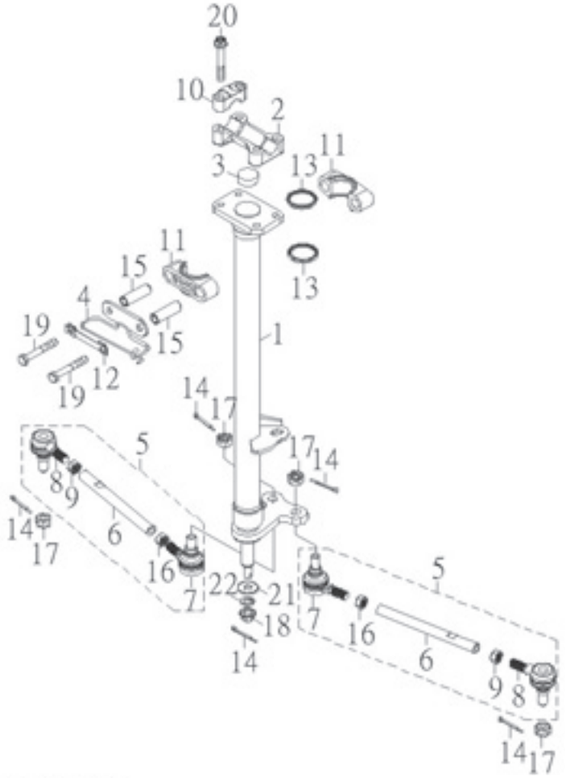

NO.	PARTS NO.	PARTS NAME		QTY	NOTE
1	42101-CGV-00	COLUMN, STEERING	轉向桿	1	
2	42106-SK9-00	BRIDGE, TOP	頂樑	1	
3	42111-RAM-00	PLUG, TAPER	塞子	1	
4	42118-AAM-00	BRACKET, STRG LOWER	導線環	1	
5	42140-CGV-00	ROD, TIE ASS'Y	連桿總成	2	
6	42141-CGV-00	ROD, TIE	連桿	2	
7	42142-RAM-00	JOINT, UNIVERSAL 1	萬向接頭	2	
8	42143-RAM-00	JOINT, UNIVERSAL 2	萬向接頭	2	
9	42146-RAM-00	NUT	連桿螺帽	2	
10	46125-RAM-00	HOLDER, HANDLE UPPER	把手上固定座	2	
11	46411-RAM-00	BEARING, STEERING	轉向桿固定座	2	
12	46416-RAM-00	WASHER, LOCK	制止片	1	
13	46417-RAM-00	OIL SEAL	轉向桿封圈	2	
14	90240-23020-B	COTTER PIN 2.3*20	開口銷	5	
15	93510-081442-C	COLLAR	轉向桿座隔管	2	
16	95201-101408-C	NUT, HEXAGON	六角螺帽	2	
17	95321-101710-C	NUT, CASTLE	有槽螺帽	4	
18	95401-101409-B	NUT, FLANGE	凸緣螺帽	1	
19	96210-08060-B	BOLT, HEXAGON	六角螺栓	2	
20	96414-08050-B	BOLT, FLANGE	凸緣螺栓	4	
21	97201-102620-B	WASHER, PLATE	平面墊圈	1	
22	97301-101720-B	WASHER, SPRING	彈簧墊圈	1	

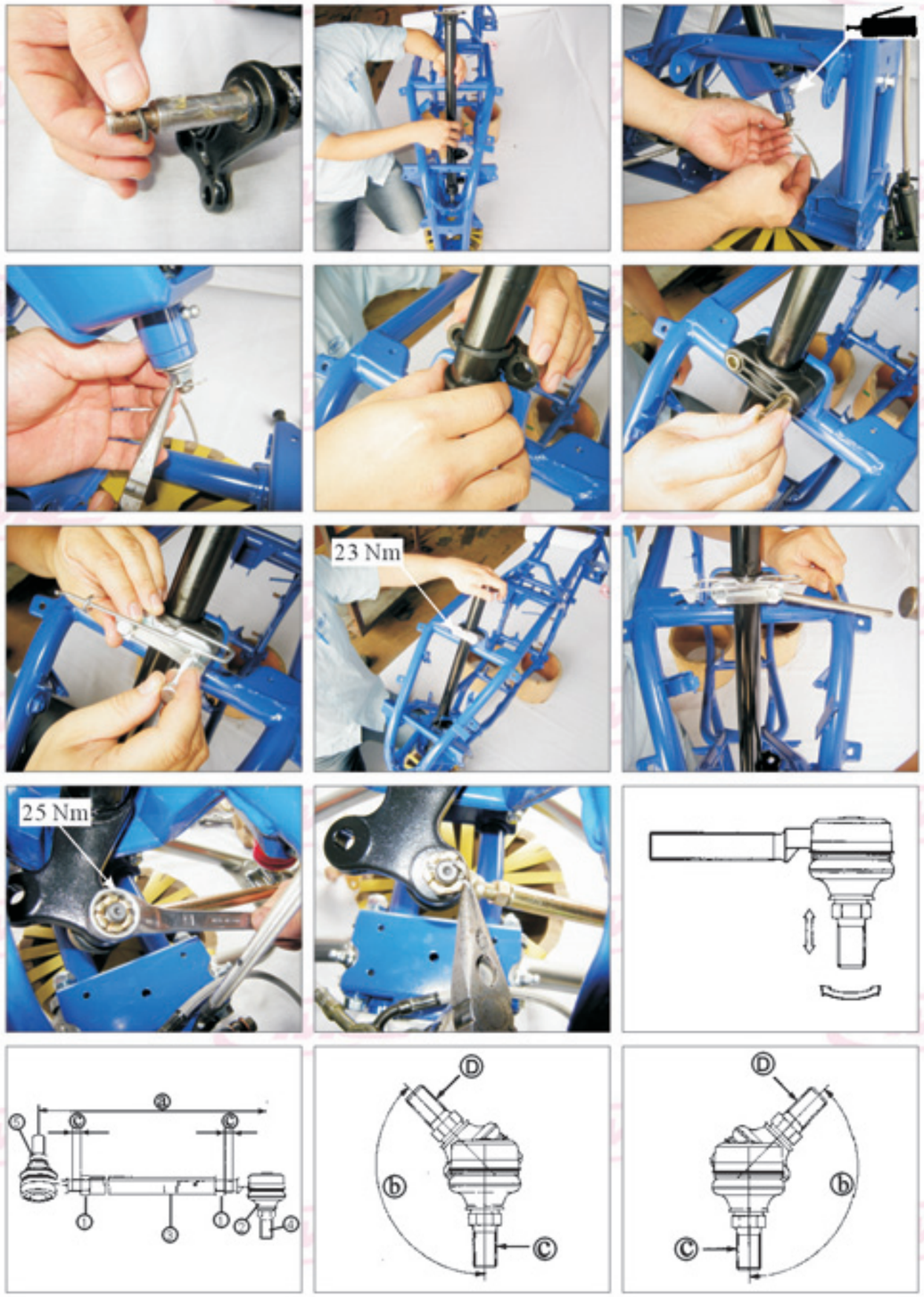

HANDLE SWITCH, LEVER 把手開關、拉桿

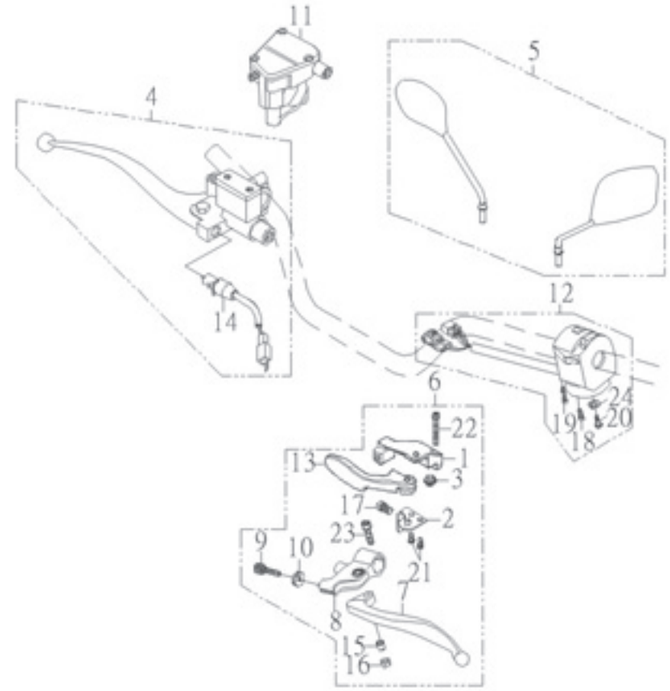

NO.	PARTS NO.	PARTS NAME		Q'TY	NOTE
1	42861-QUA-01	GEAR SHIFT BRACKET	變檔開關座	1	
2	42863-QUA-01	LOCK, GEAR SHIFT LEVER	拉柄鎖位板	1	
3	42865-QUA-01	PIN, LEVER FIXTURE	變檔拉柄固定銷	1	
4	45870-JOW-00	MASTER CYLINDER SUB ASS'Y	主缸總成	1	
5	56270-ROA-00	MIRROR ASS'Y, HANDLE	後照鏡組	1	
6	62910-CEW-00	LEVER ASS'Y, HANDLE	左拉桿組	1	
7	62912-RAM-01	LEVER, L	左拉桿	1	
8	62915-RAM-01	LEVER HOLDER, L	左拉桿固定座	1	
9	62916-RAM-00	BOLT, WIRE ADJUSTING	離合器線調整螺栓	1	
10	62917-RAM-00	NUT, WIRE ADJUSTING	離合器線調整螺帽	1	
11	62920-JOW-00	THROTTLE ASS'Y	節流座總成	1	
12	62930-CGV-00	HANDLE SWITCH ASS'Y L	左把手開關總成	1	
13	62971-CEW-00	LEVER, PARKING	駐車拉柄	1	
14	62980-JOW-00	FRONT STOP SWITCH	前剎車燈開關	1	
15	93510-060809-C	COLLAR, LEVER	拉桿軸環	1	
16	95311-061006-G	NUT, NYLON	尼龍螺帽	1	
17	96210-10016-G	BOLT, HEXAGON 10*16	六角螺栓	1	
18	96310-05030-G	SCREW, PAN HEAD	十字孔頭螺絲	1	
19	96310-05040-G	SCREW, PAN HEAD	十字孔頭螺絲	1	
20	96310-06010-G	SCREW, PAN HEAD	十字孔頭螺絲	1	
21	96310-06012-G	SCREW, PAN HEAD 6*12	十字孔頭螺絲	2	
22	96310-06040-G	SCREW, PAN HEAD 6*40	十字孔頭螺絲	1	
23	96510-06022-G	BOLT	六角承窩螺栓	1	
24	97201-061310-B	WASHER, PLATE 6.5*13*1.0	平面墊圈	1	

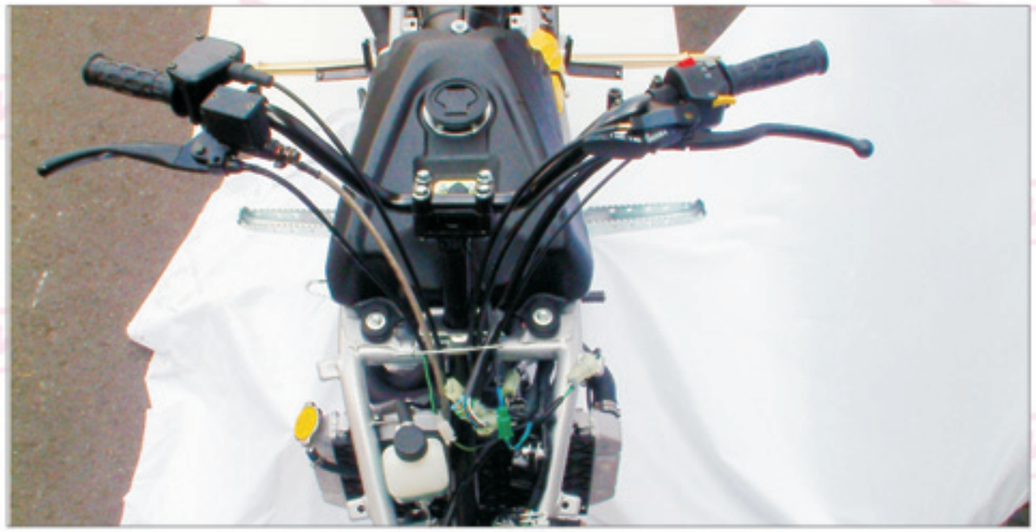

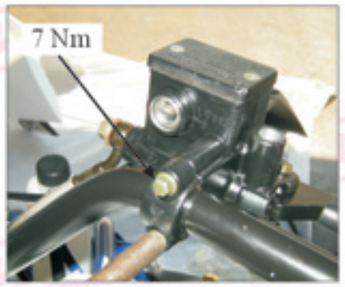
7 Nm

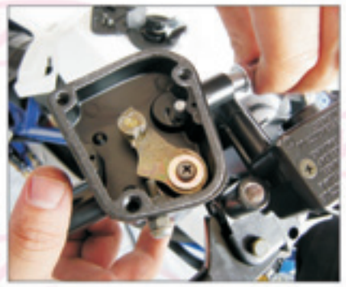

7 Nm

23 NM

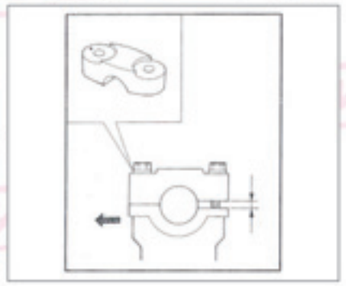

STEERING HANDLE CABLE 轉向把手，鋼索

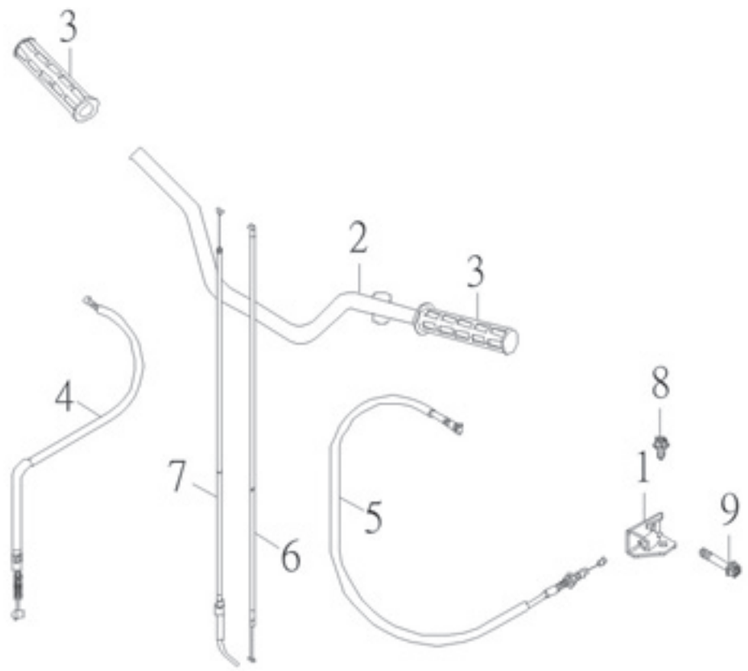

NO.	PARTS NO.	PARTS NAME		Q'TY	NOTE
1	25793-CGV-00	HOLDER, CLUTCH WIRE	離合器導線固定座	1	
2	46110-CJW-00	HANDLEBAR	把手整體	1	
3	46240-RAM-00	GRIP	握把	2	
4	61340-CGV-00	CABLE, HANDBRAKE	手剎車鋼索	1	
5	61420-CGV-00	CABLE, CLUTCH	離合器導線	1	
6	61620-CGV-00	CABLE, THROTTLE	節流鋼索	1	
7	61720-CGV-00	CABLE, CHOKE	阻風導線	1	
8	96411-06016-B	BOLT, FLANGE	凸緣螺栓	1	
9	96411-06050-B	BOLT, FLANGE	凸緣螺栓	1	

FRAME 車架

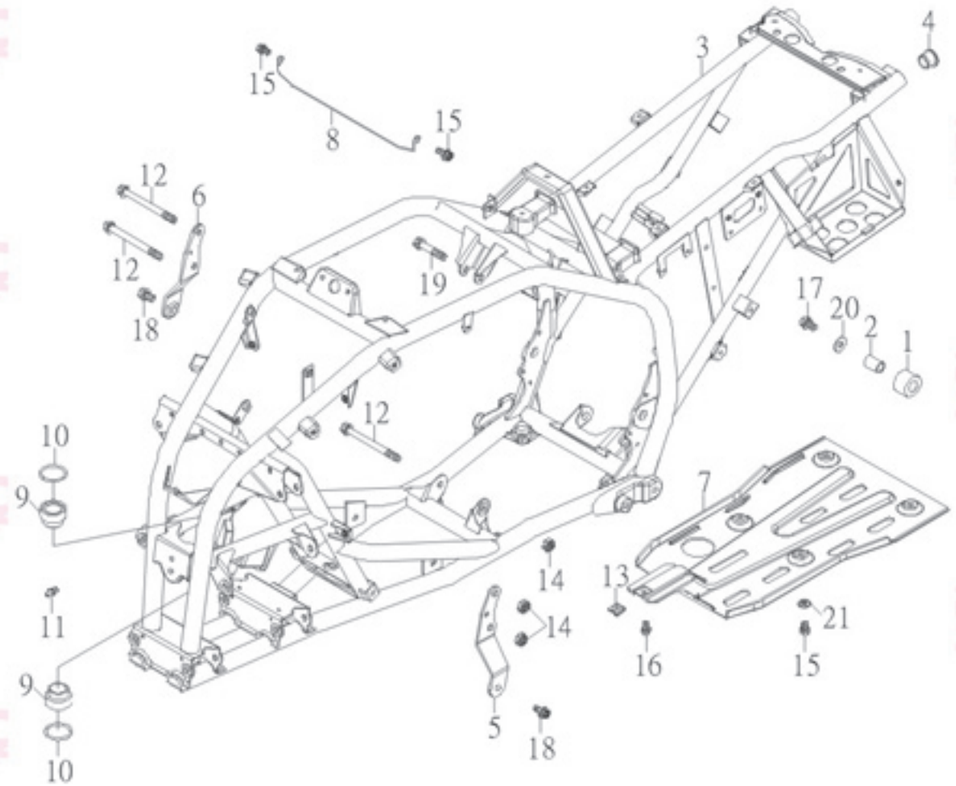

NO.	PARTS NO.	PARTS NAME		Q'TY	NOTE
1	32167-RAM-00	TENSIONER	拉緊環	2	
2	32168-RAM-00	BUSH	拉緊環軸襯	2	
3	41110-CGV-00	FRAME COMP	車架整體	1	
4	41154-RAM-00	PLUG, SPECIAL SHAPE	管塞	2	
5	41181-CGV-00L	ENGINE HANGER FRONT	引擎前固定座左	1	
6	41181-CGV-00R	ENGINE HANGER FRONT	引擎前固定座右	1	
7	41199-CJW-00	FRAME BASEPLATE	車架底板	1	
8	42117-CGV-00	CLIP	配線夾	1	
9	46412-RAM-00	BUSH, SOLID	轉向桿襯套	2	
10	93210-24148	O-RING 2.4*14.8	護油圈	2	
11	94340-06010-B	NIPPLE, GREASE M6*P1.0	黃油嘴	1	
12	94610-10113-B	BOLT, FLANGE	吊架固定軸	3	
13	95101-061820-C	NUT, SPRING	U型板螺帽	1	
14	95311-101710-B	NUT, NYLON	尼龍螺帽	4	
15	96414-06012-B	BOLT, FLANGE	凸緣螺栓	6	
16	96414-06016-B	BOLT, FLANGE	凸緣螺栓	1	
17	96414-08012-B	BOLT, FLANGE	凸緣螺栓	2	
18	96414-10016-B	BOLT, FLANGE	凸緣螺栓	2	
19	96414-10047-C	BOLT, FLANGE	凸緣螺栓	1	
20	97201-082420-B	WASHER, PLATE 8.7*24*2.0	平面墊圈	2	
21	97321-061825-G	WASHER, FLANGE	凸緣墊圈	4	

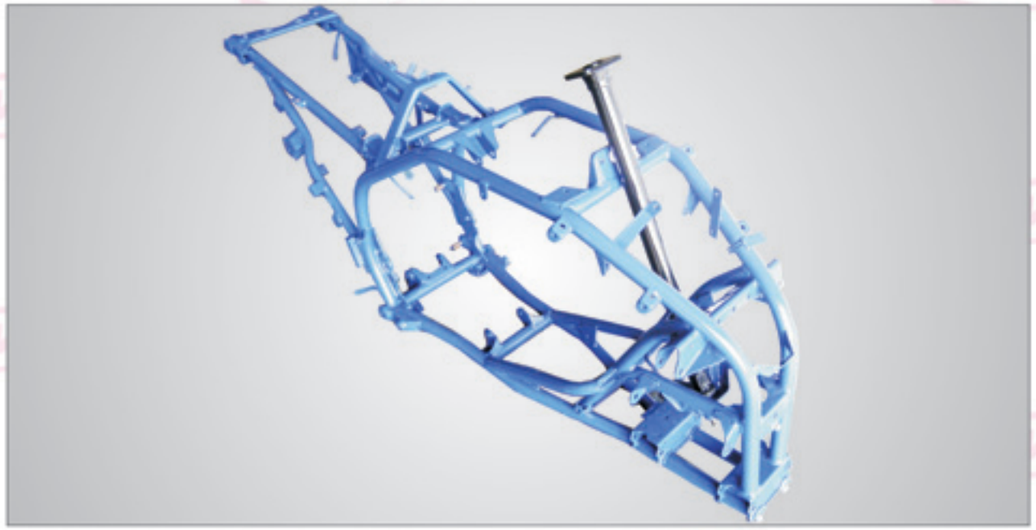

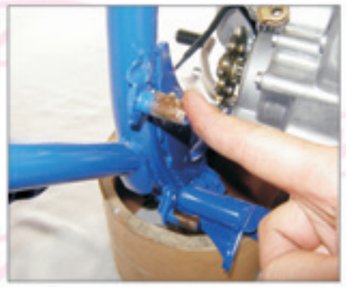

FRONT SUSPENSION 前懸吊系統

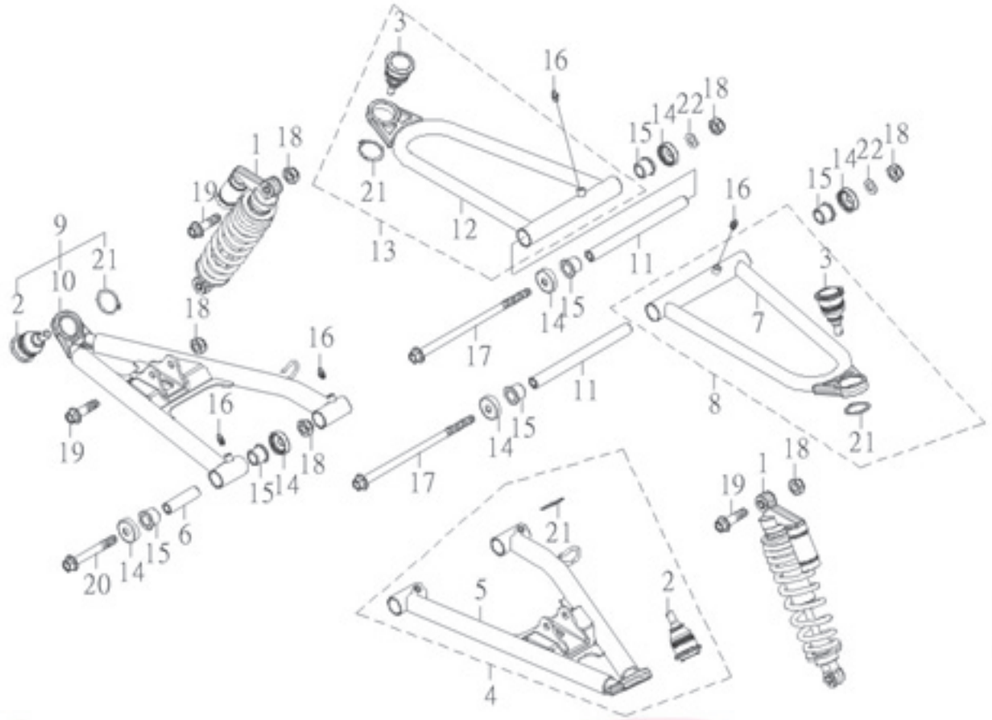

NO.	PARTS NO.	PARTS NAME		Q'TY	NOTE
1	42126-CGV-00	SHOCK ABSORBER ASS'Y	前緩衝器總成	2	
2	42150-CGV-00	UNIVERSAL JOINT COMP	萬向接頭組	2	
3	42155-CGV-00	UNIVERSAL JOINT COMP	上萬向接頭組	2	
4	42161-CGV-01	FRT.LWR. ARM LEFT	左前下搖臂	1	
5	42161-CGV-01G	FRT.LWR. ARM LEFT	左前下搖臂	1	
6	42163-RAM-00	COLLAR	下搖臂軸襯	4	
7	42166-CGV-01G	FRT.UPPER. ARM LEFT	左前上搖臂	1	
8	42166-CGV-01S	FRT.UPPER. ARM LEFT	左前上搖臂	1	
9	42171-CGV-01	FRT.LWR. ARM RIGHT	右前下搖臂	1	
10	42171-CGV-01G	FRT.LWR. ARM RIGHT	右前下搖臂	1	
11	42173-RAM-00	COLLAR	上搖臂軸襯	2	
12	42176-CGV-01G	FRT.UPPER. ARM RIGHT	右前上搖臂	1	
13	42176-CGV-01S	FRT.UPPER. ARM RIGHT	右前上搖臂	1	
14	42183-RAM-00	COVER, THRUST	墊封蓋	12	
15	93330-152118	BUSH, SOLID	羅龍滑動軸承	12	
16	94340-06010-B	NIPPLE, GREASE M6*P1.0	黃油嘴	6	
17	94610-10208-B	SHAFT, PIVOT	上搖臂固定軸	2	
18	95311-101710-B	NUT, NYLON	尼龍螺帽	10	
19	96414-10055-B	BOLT, FLANGE	凸緣螺栓	4	
20	96414-10080-B	BOLT, FLANGE	凸緣螺栓	4	
21	97010-30015-K	CIRCLIP	C型扣環	4	
22	97201-102020-B	WASHER, PLATE 10.5*20*2	平面墊圈	2	

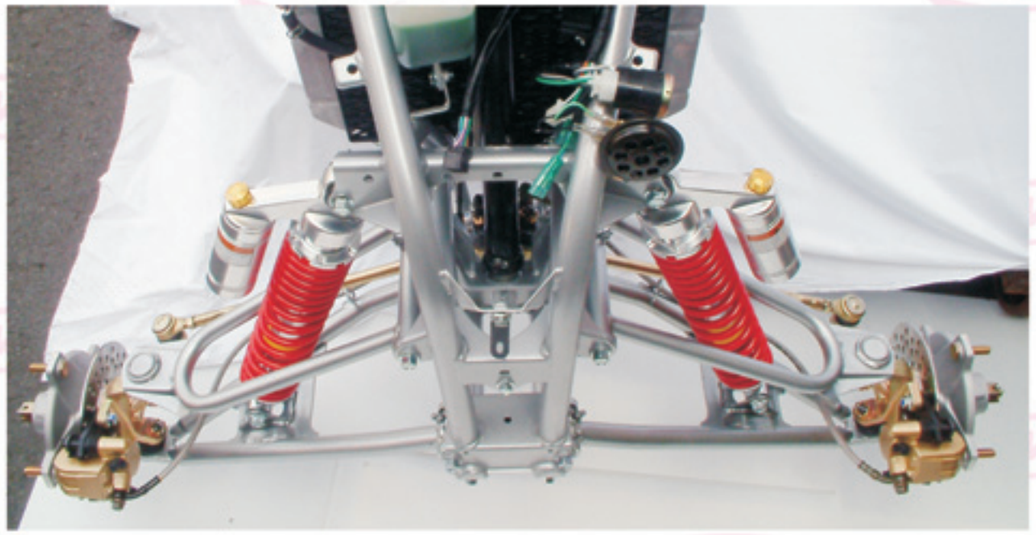

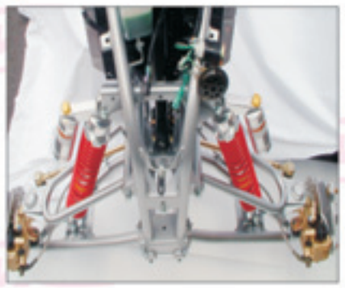

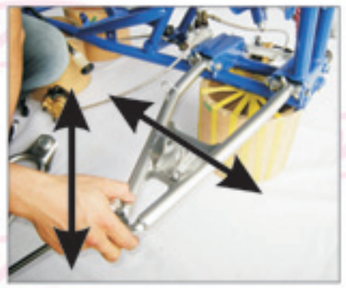

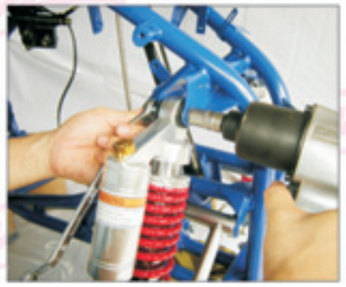

FRONT WHEEL 前輪

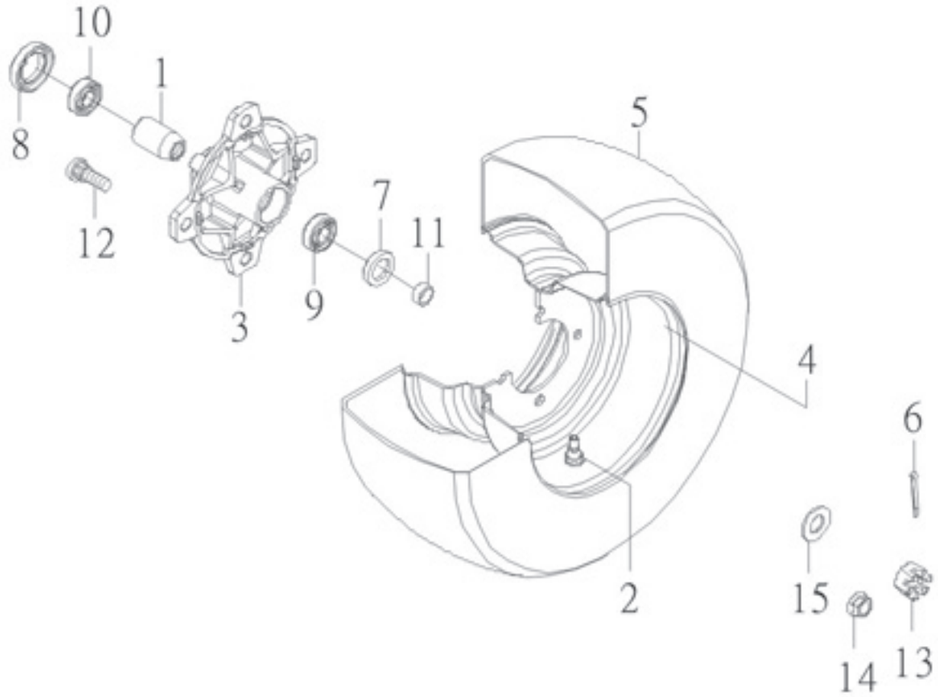

NO.	PARTS NO.	PARTS NAME		Q'TY	NOTE
1	42515-RAM-00	SPACER, BEARING	前輪轂隔管	2	
2	42570-CBW-00	VALVE, RIM	氣門嘴	2	鋁圈用
	42570-RAM-00	VALVE, RIM	氣門嘴	2	
3	42581-RAM-01	HUB, FRONT	前輪轂	2	
4	42582-CBW-02	WHEEL, FRONT AT10*5.5AT	前輪圈	2	鋁圈
	42582-RAM-00	WHEEL, FRONT AT10*5.5AT	前輪圈	2	
5	42590-CEW-01	TIRE, FRONT AT21*7-10 K532F 25N	前輪胎	2	
6	90240-29025-B	COTTER PIN 2.9*25	開口銷	2	
7	93110-22357	OIL SEAL TC 22*35*7	油封	2	
8	93110-26427	OIL SEAL TC26*42*7/10	油封	2	
9	93320-153511S	BALL BEARING 6202 CS05/2A	滾珠軸承	2	
10	93320-204212M	BALL BEARING 6004CM/2A	滾珠軸承	2	
11	93510-152209-C	COLLAR	前輪轂側隔管	2	
12	94710-10037-C	BOLT, RIBBED NECK	輪圈固定螺栓	8	鋁圈用
	94710-10032-C	BOLT, RIBBED NECK	輪圈固定螺栓	8	
13	95321-142215-C	NUT, CASTLE	有槽螺帽	2	
14	95801-101718-C	LOCK NUT, FLANGE	鎖位凸緣螺帽	8	鋁圈用
	95401-101409-C	NUT, FLANGE	凸緣螺帽	8	
15	97201-142820-C	WASHER, PLATE 14.2*28.4*2	平面墊圈	2	

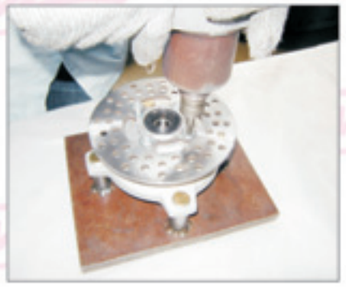

REAR ARM 擺動臂

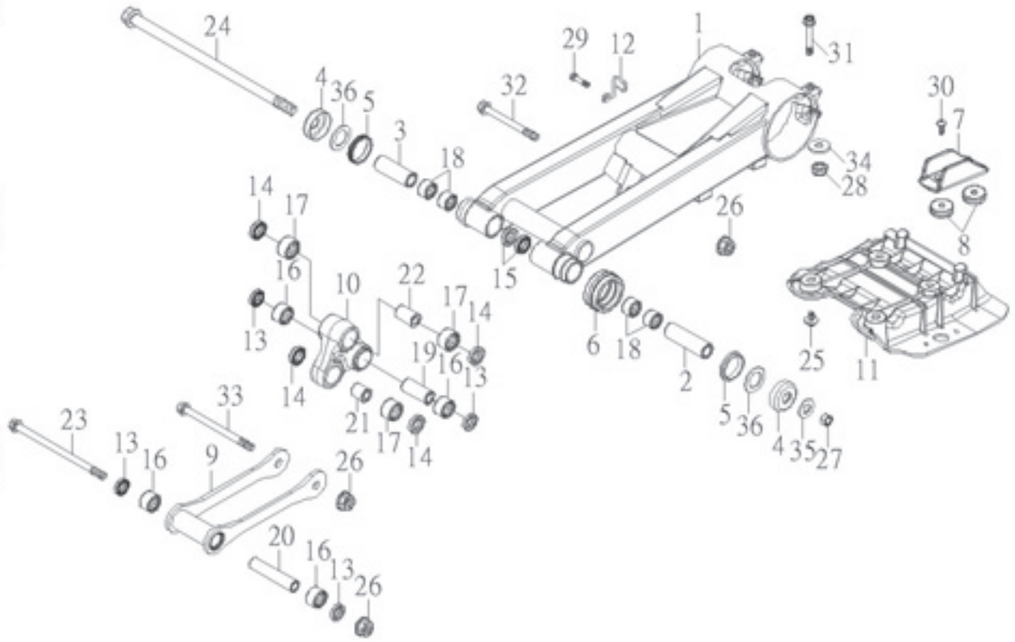

NO.	PARTS NO.	PARTS NAME		Q'TY	NOTE
1	32100-CGV-00	REAR ARM	擺動臂	1	
2	32115-CGV-00	BUSH	擺動臂軸襯左	1	
3	32116-CGV-00	BUSH	擺動臂軸襯右	1	
4	32118-RAM-00	COVER, THRUST	擺動臂塵封蓋	2	
5	32119-RAM-00	OIL SEAL	擺動臂防塵封	2	
6	32160-RAM-00	SEAL, GUARD	鏈條導環	1	
7	32165-CGV-00	SUPPORT, CHAIN	鏈條支持塊	1	
8	32166-CGV-00	WASHER	鏈條支持塊墊塊	0	
	32166-CGV-00	WASHER	鏈條支持塊墊塊	2	認證
9	32181-CGV-00	CONNECTING ARM	連接臂	1	
10	32186-CGV-00	TRANSFER ARM	轉接臂	1	
11	32190-CGV-00	COVER	下護蓋	1	
12	41189-CFS-00	STRG LOWER	導線環	1	
13	93110-18243	OIL SEAL KC 18*24*3	油封	4	
14	93110-20264	OIL SEAL KC 20*26*4	油封	4	
15	93110-22284	OIL SEAL TC 22*28*4	油封	2	
16	93310-182416	NEEDLE BEARING HK-1816	滾針軸承	4	
17	93310-202616	NEEDLE BEARING HK-2016	滾針軸承	3	
18	93310-222820	NEEDLE BEARING HK-2220	滾針軸承	4	
19	93510-121869	BUSH	軸襯	1	
20	93510-121882	BUSH	軸襯	1	

21	93510-122030	BUSH	軸襯	1	
22	93510-122048	BUSH	軸襯	1	
23	94610-12114-B	BOLT, FLANGE	連接臂固定軸	1	
24	94610-15258-B	SHAFT, PIVOT	擺動臂軸	1	
25	94710-06016-C	BOLT, FLANGE	置物箱固定螺栓	4	
26	95301-121713-B	NUT, LOCK	止鬆螺帽	3	
27	95301-142212-B	NUT, LOCK 14MM	止鬆螺帽	1	
28	95311-101710-B	NUT, NYLON	尼龍螺帽	2	
29	96218-06012-B	BOLT, HEXAGON WITH WASHER	六角螺栓附墊圈	1	
30	96318-06015-G	SCREW, PAN HEAD	十字孔頭螺絲	2	
	96318-06025-G	SCREW, PAN HEAD	十字孔頭螺絲	2	認證
31	96414-10070-B	BOLT, FLANGE	凸緣螺栓	2	
32	96414-12072-B	BOLT, FLANGE	凸緣螺栓	1	
33	96414-12095-B	BOLT, FLANGE	凸緣螺栓	1	
34	97201-102020-B	WASHER, PLATE	平面墊圈	2	
35	97201-142820-B	WASHER, PLATE 14.2*28.4*2.0	平面墊圈	1	
36	97201-243820	WASHER, PLATE	平面墊圈	2	

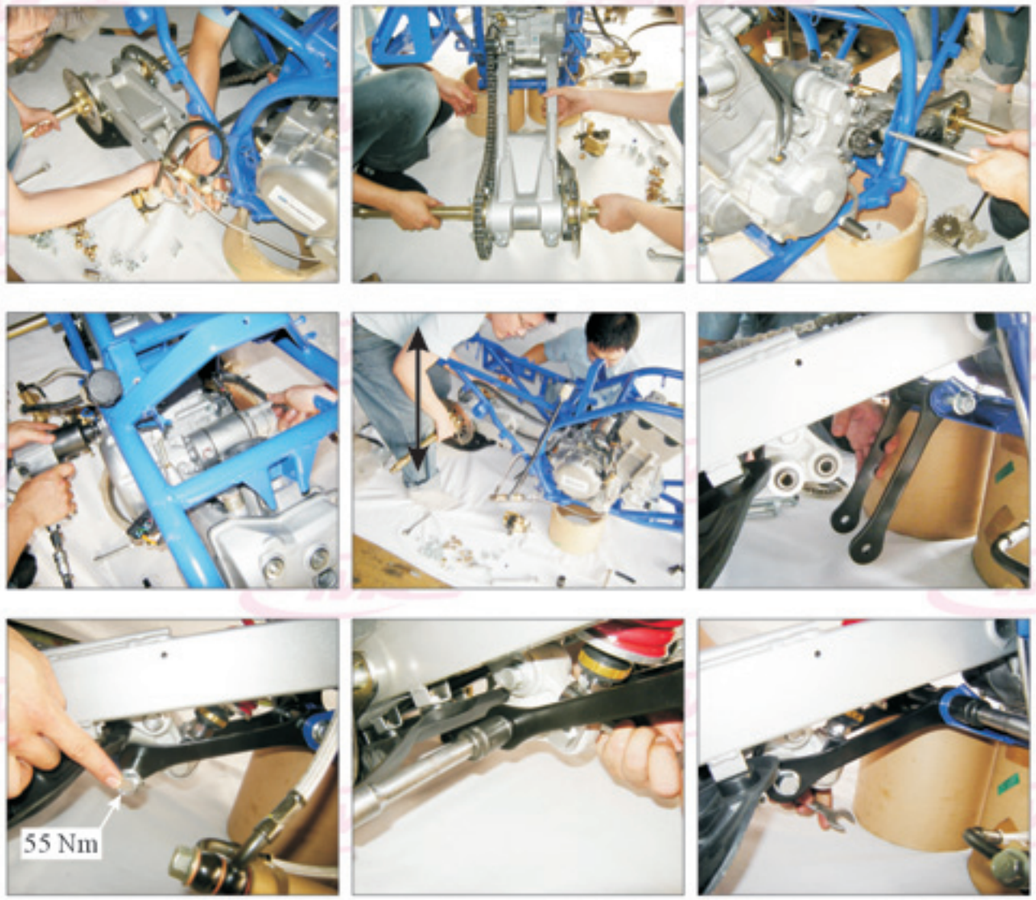

HUB, REAR 後輪毂

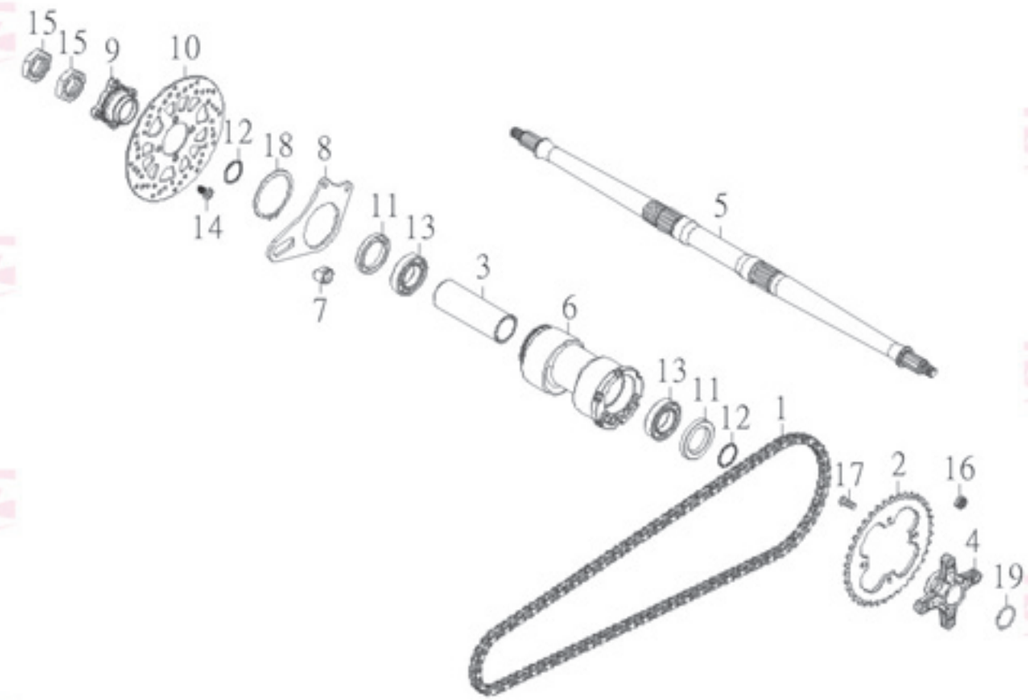

NO.	PARTS NO.	PARTS NAME		Q'TY	NOTE
1	25743-CGV-00	CHAIN 520 UO 94L	鏈條	1	
	25743-CGV-01	CHAIN 520 UO 92L	鏈條	1	認證
2	42812-CGV-00	SPROCKET, DRIVEN 520-38T	傳動鏈輪	1	
	42812-CGV-01	SPROCKET, DRIVEN 520-36T	傳動鏈輪	1	使用92L鏈條
	42812-CGV-02	SPROCKET, DRIVEN 520-34T	傳動鏈輪	1	認證
3	42815-CGV-00	SPACER, BEARING	後輪隔管	1	
4	42821-CGV-01	DRIVE SPROCKET BASE	傳動鏈輪座	1	
5	42835-CGV-01	AXLE, WHEEL	後輪軸	1	
6	42881-CGV-00	HUB, REAR	後輪毂	1	
7	45809-CGV-00	BUSHING, CALIPER	卡鉗承座襯套	1	
8	45810-CGV-00	BRACKET, CALIPER	卡鉗承座	1	
9	45830-CGV-01	BRACKET, DISC	剎車圓盤座	1	
10	45831-RAM-00	DISC, BRAKE	剎車圓盤	1	
11	93110-50688	OIL SEAL TC 50*68*8	油封	2	
12	93210-25350	O-RING 2.5*35	護油圈	2	
13	93320-406815	BALL BEARING 6008/2A	滾珠軸承	2	
14	94706-08017-B	BOLT, BUTTON	剎車盤固定螺栓	4	
15	95201-365014-C	NUT, HEXAGON	六角螺帽	2	
16	95311-101710-B	NUT, NYLON	尼龍螺帽	4	
17	96210-10032-B	BOLT, HEXAGON	六角螺栓	4	
18	97010-78025-K	CIRCLE	C形扣環	1	
19	97050-30040-C	CIRCLE	後輪軸止動環	1	

Drive-chain slack check and adjustment

Inspect the drive chain while all tires are touching the ground. Check the slack at the position shown in the
The normal vertical deflection is approximately 30-40mm (1.2-1.6in). If the deflection exceeds 40 mm (1.6 in), adjust the chain slack.

Drive chain slack adjustment

/ 1. Loosen the rear wheel hub bolts.

/ 2. Loosen the adjuster lockouts on each side. To tighten the chain, turn the chain adjuster clockwise. To loosen the chain, turn the adjuster counterclockwise and push the wheel forward. Turn each adjuster exactly the same amount to maintain correct axle alignment. There are marks on each side of the swing-arm and on each chain adjuster. Use them to check for proper alignment.

/ 3. After adjusting alignment, be sure to tighten the lockouts and the wheel hub bolts.

- NOTE:

Upper wheel hub bolt: **85 Nm (8.5 m.kg,61 ft.lbf)**
Lower wheel hub bolt: **85 Nm (8.5 m.kg,61 ft.lbf)**

Drive chain cleaning and lubrication

Use only Kerosene to clean the drive chain. Wipe it dry, and thoroughly lubricate it with SAE 30-50 motor oil. Do not use any other lubricants on the drive chain.

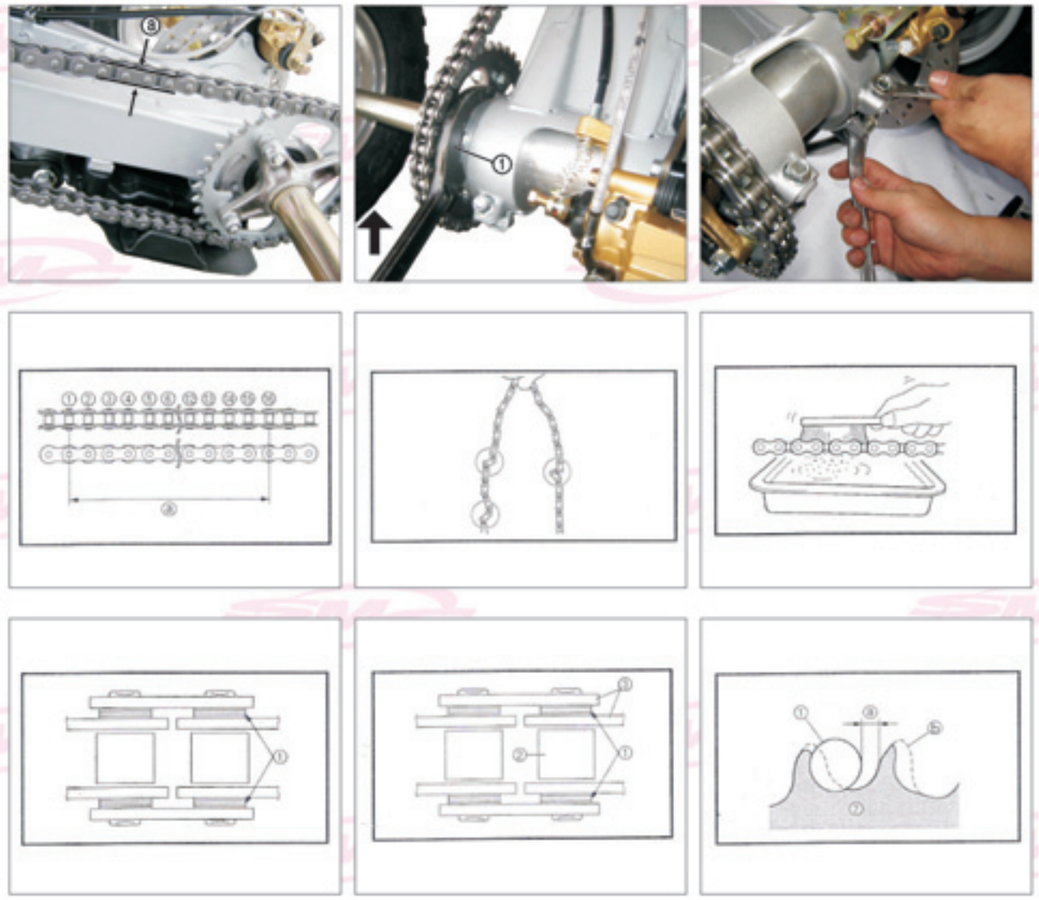

REAR SUSPENSION 後懸吊系統

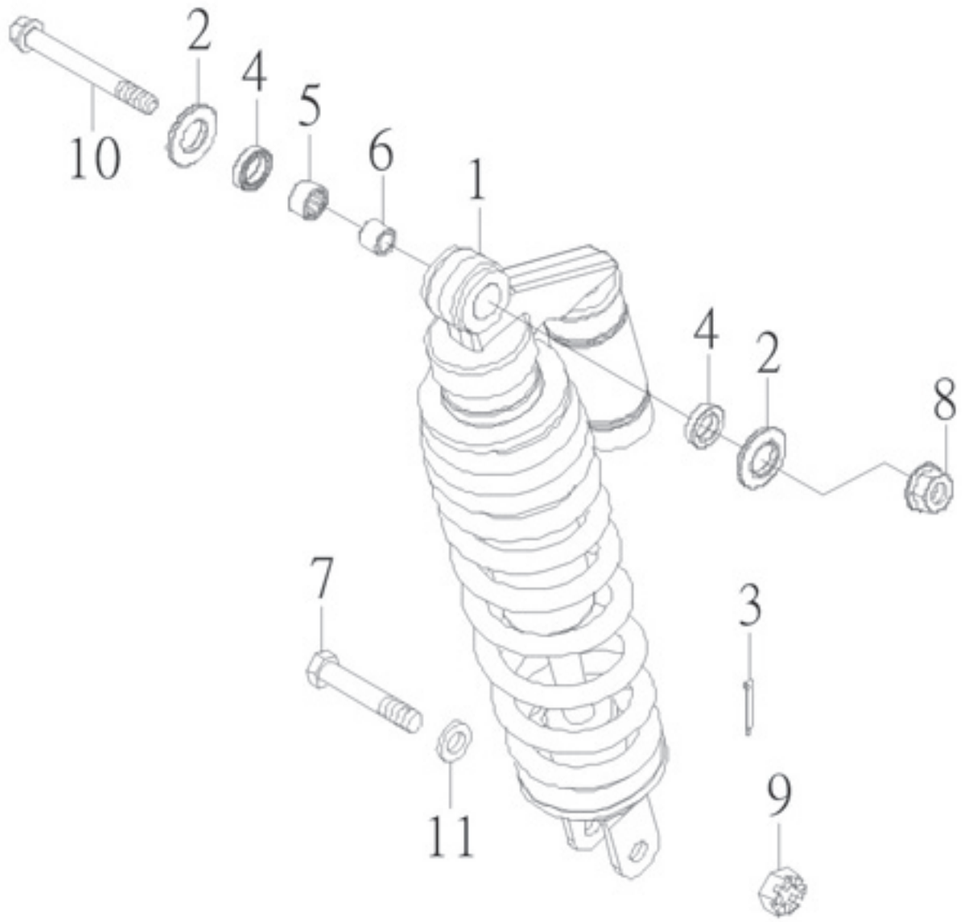

NO.	PARTS NO.	PARTS NAME		Q'TY	NOTE
1	32210-CGV-00	SHOCK ABSORBER ASS'Y, REAR	後緩衝器總成	1	
2	32231-CGV-00	WASHER	後緩衝器墊圈	2	
3	90240-23020-B	COTTER PIN 2.3*20	開口銷	1	
4	93110-18243	OIL SEAL KC 18*24*3	油封	2	
5	93310-182416	NEEDLE BEARING HK-1816	滾針軸承	1	
6	93510-121832	BUSH	軸襯	1	
7	94716-12051-B	BOLT, KEYHOLE	栓孔螺栓	1	
8	95301-121713-B	NUT, LOCK	止鬆螺帽	1	
9	95321-121710-B	NUT, CASTLE	有槽螺帽	1	
10	96414-12060-B	BOLT, FLANGE	凸緣螺栓	1	
11	97201-122415-B	WASHER, PLATE	平面墊圈	1	

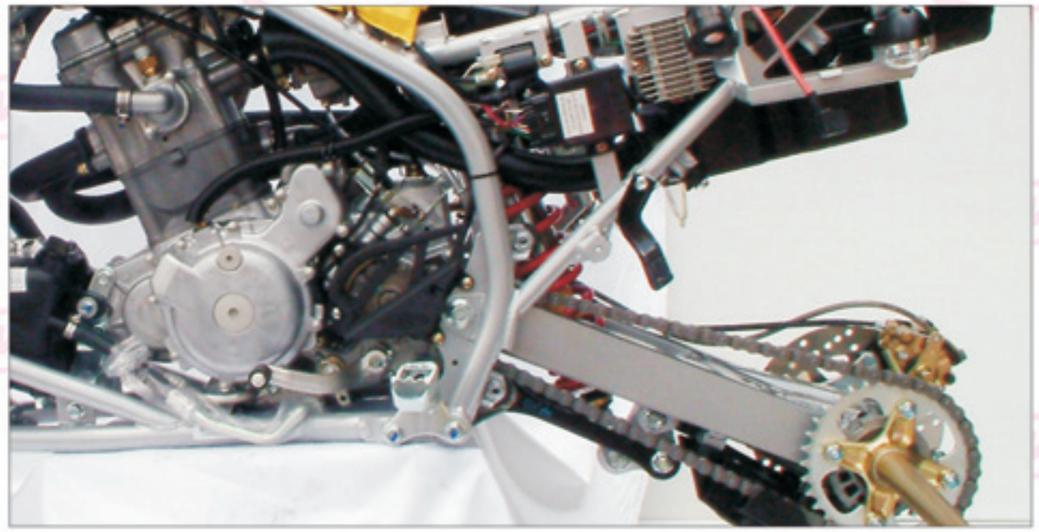

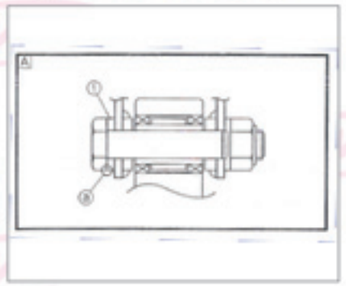

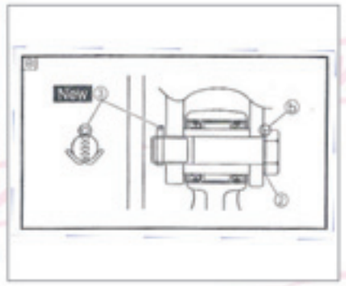

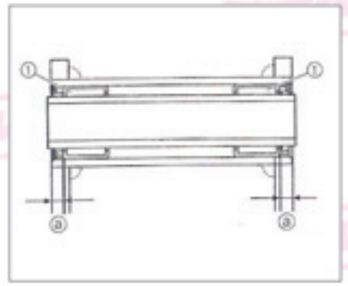

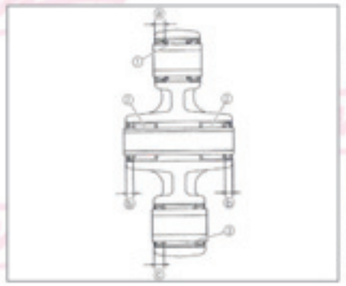

KNUCKLE, STEERING 轉向關節座

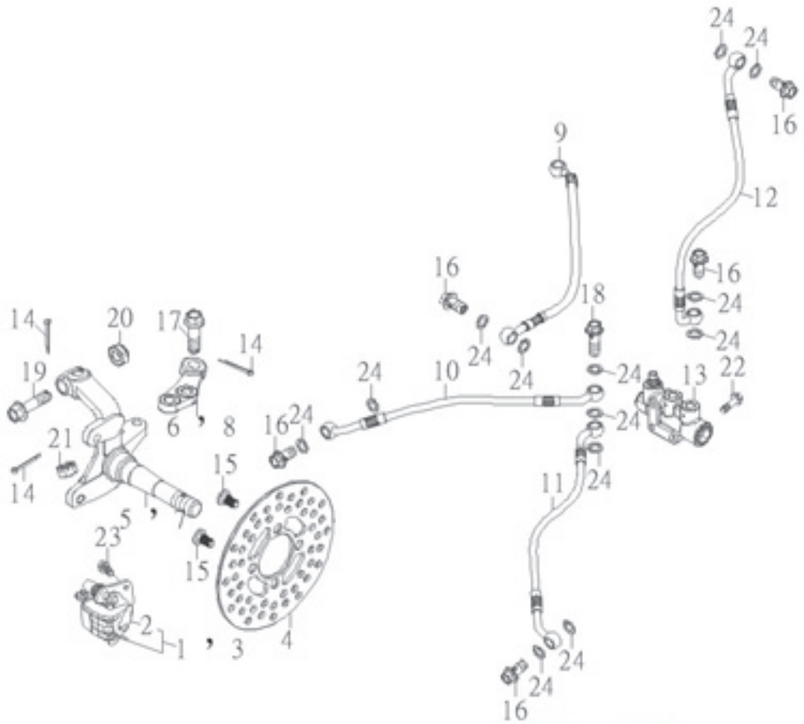

NO.	PARTS NO.	PARTS NAME		QTY	NOTE
1	45811-RAM-02	CALIPER ASS'Y, L FRONT	左前卡鉗總成	1	
2	45815-RAM-01	PAD, CALIPER	剎車片組	2	
3	45821-RAM-02	CALIPER ASS'Y, R FRONT	右前卡鉗總成	1	
4	45831-RAM-01	DISK, BRAKE	剎車圓盤	2	
5	45861-RAM-01	KNUCKLE, STEERING L	左前轉向關節座	1	
6	45862-RAM-00	JOINT, ROD L	左前連結片	1	
7	45866-RAM-01	KNUCKLE, STEERING R	右前轉向關節座	1	
8	45867-RAM-00	JOINT, ROD R	右前連結片	1	
9	61811-CGV-00	HOSE, BRAKE	腳剎車油管	1	
10	61812-CGV-00R	HOSE, FRONT BRAKE R	右前剎車油管	1	
11	61812-CJW-01L	HOSE, FRONT BRAKE L	左前剎車油管	1	
12	61820-CGV-00	HOSE, HANDBRAKE	手剎車油管	1	
13	61860-JOW-01	BRAKE SHUNT ASS'Y	分流閥組	1	
14	90240-23020-B	COTTER PIN 2.3*20	開口銷	8	
15	94706-08017-B	BOLT, BUTTON	剎車盤固定螺栓	8	
16	94716-10022-G	BOLT, UNION	接合螺栓	5	
17	94716-10030-C	BOLT, KEYHOLE	栓孔螺栓	4	
18	94716-10033-G	BOLT, UNION	接合螺栓	1	
19	94716-10040-C	BOLT, KEYHOLE	栓孔螺栓	2	
20	95311-101710-C	NUT, NYLON	尼龍螺帽	2	
21	95321-101710-C	NUT, CASTLE	有槽螺帽	2	
22	96414-06035-B	BOLT, FLANGE	凸緣螺栓	2	
23	96414-08016-B	BOLT, FLANGE	凸緣螺栓	4	
24	97230-101512	WASHER, COPPER	銅墊圈	13	

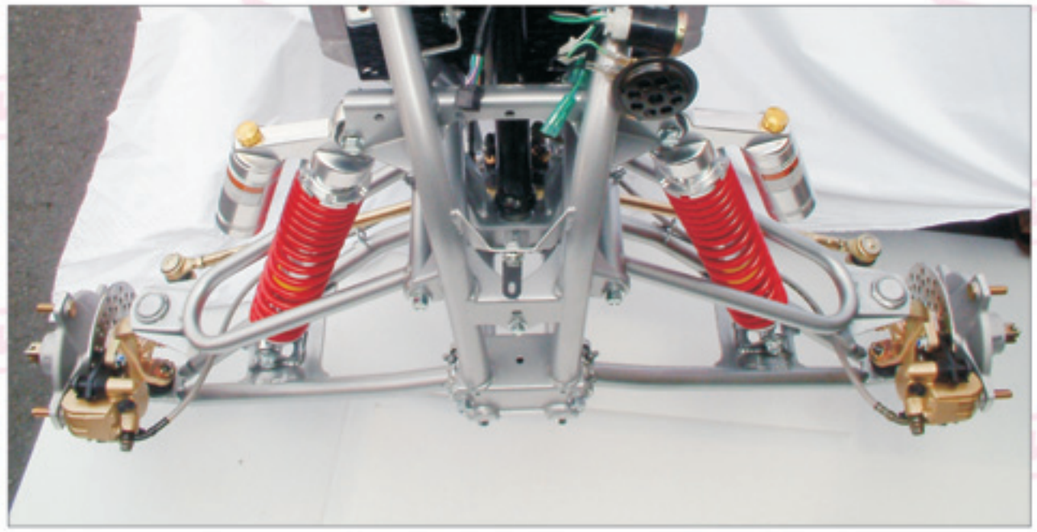

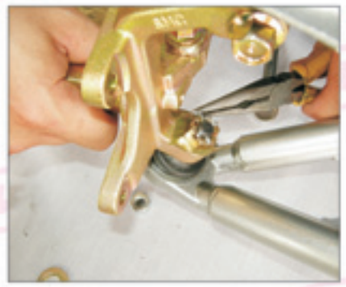

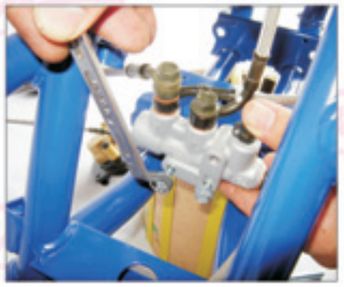

REAR BRAKE 後煞車系統

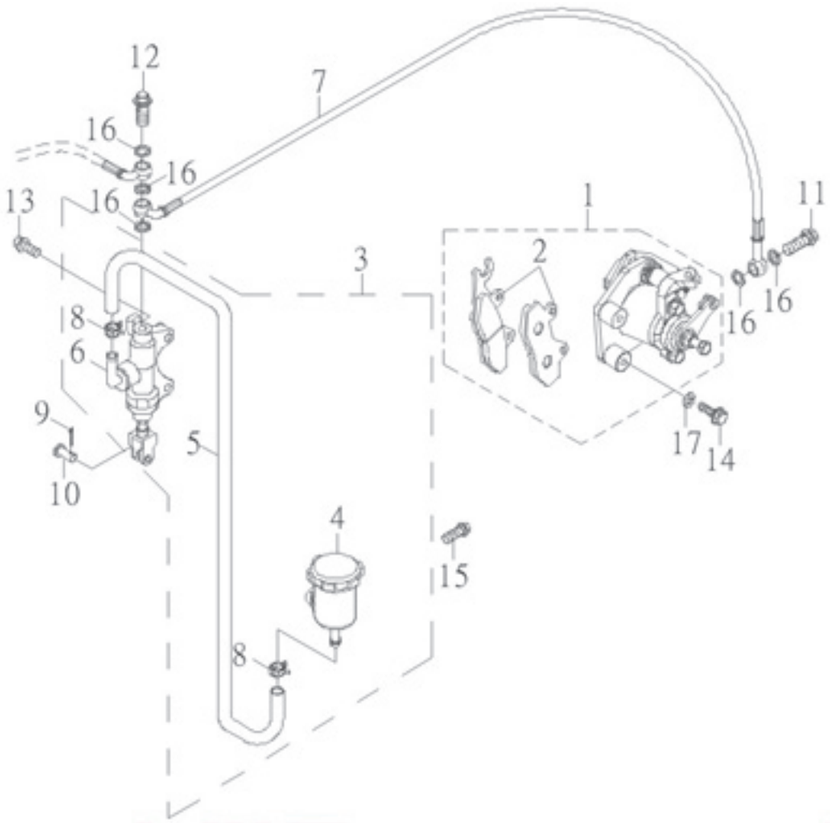

NO.	PARTS NO.	PARTS NAME		Q'TY	NOTE
1	45801-CGV-00	CALIPER ASS'Y	卡鉗總成	1	
2	45815-RAM-01	PAD, CALIPER	剎車片組	1	
3	45870-CGV-00	MASTER CYLINDER SUB ASS'Y	主缸總成	1	
4	45871-CGV-00	RESERVOIR	油槽總成	1	
5	45874-CGV-00	HOSE 8*13*380	油管	1	
6	45877-RAM-01	CYLINDER KIT, MASTER	推進器組	1	
7	61320-CGV-00	HOSE, BRAKE	剎車油管	1	
8	90220-80013	CLAMP	管夾	2	
9	90240-14016-B	COTTER PIN	開口銷	1	
10	94610-06016-B	PIN, CLEVIS	帶頭銷	1	
11	94716-10022-G	BOLT, UNION	接合螺栓	1	
12	94716-10033-G	BOLT, UNION	接合螺栓	1	
13	96414-06022-B	BOLT, FLANGE	凸緣螺栓	2	
14	96414-08028-B	BOLT, FLANGE	凸緣螺栓	2	
15	96612-05012-B	BOLT, HEXAGON WITH WASHER	六角十字穴螺栓附墊圈	1	
16	97230-101512	WASHER, COPPER 10.3*15*1.2	銅墊圈	5	
17	97301-081520-B	WASHER, SPRING	彈簧墊圈	2	

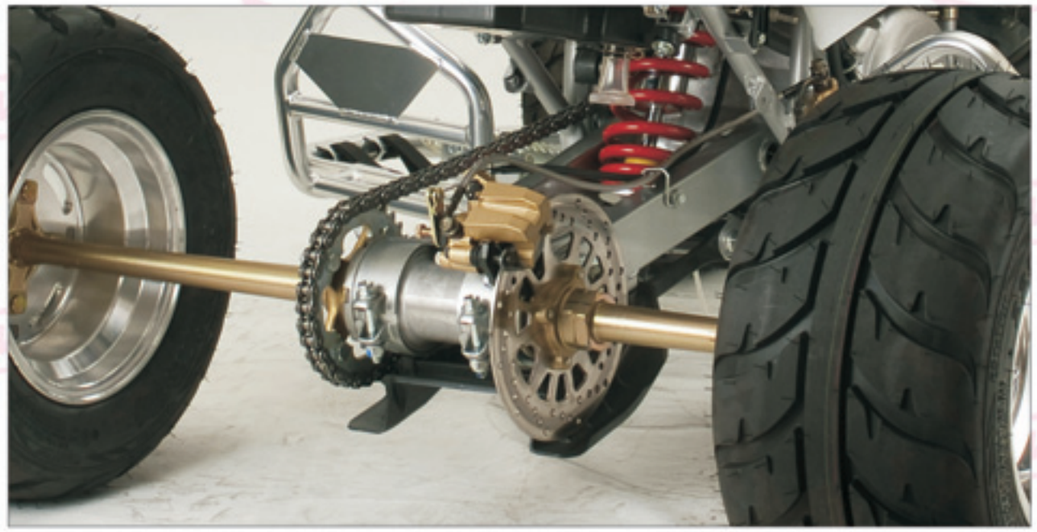

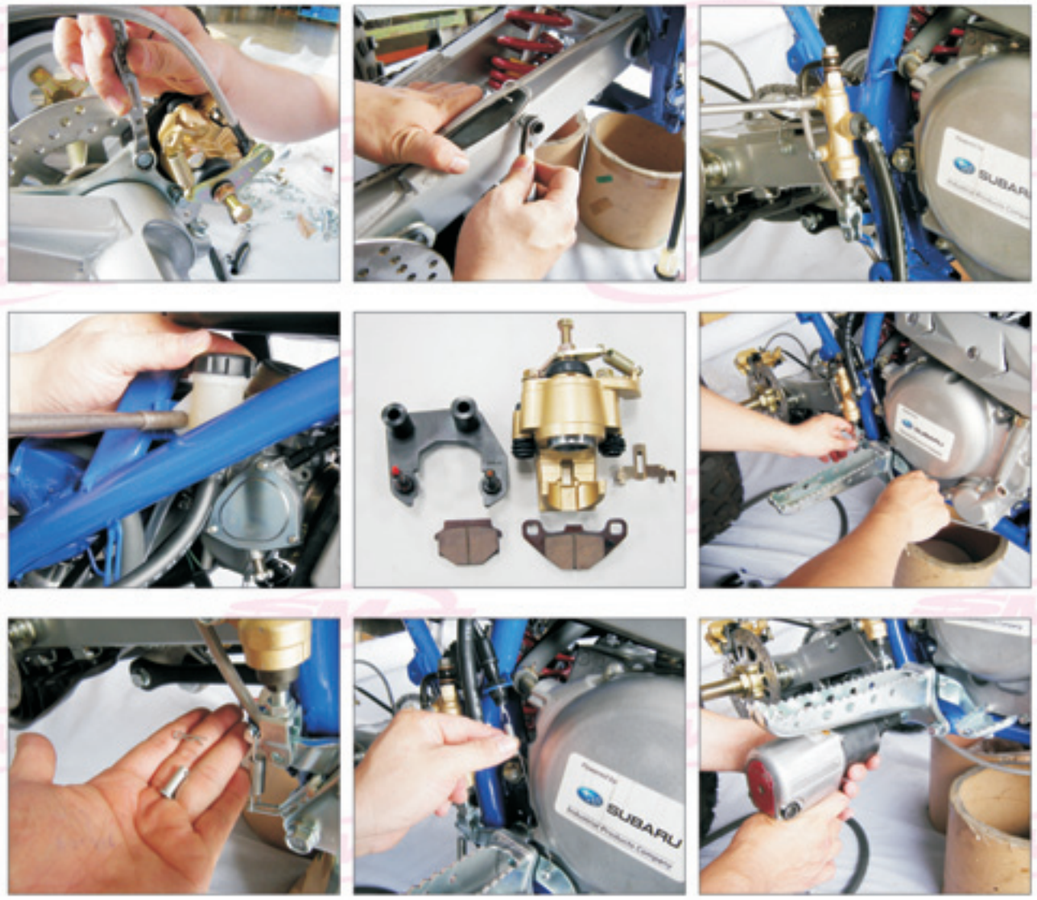

OIL TANK 機油箱

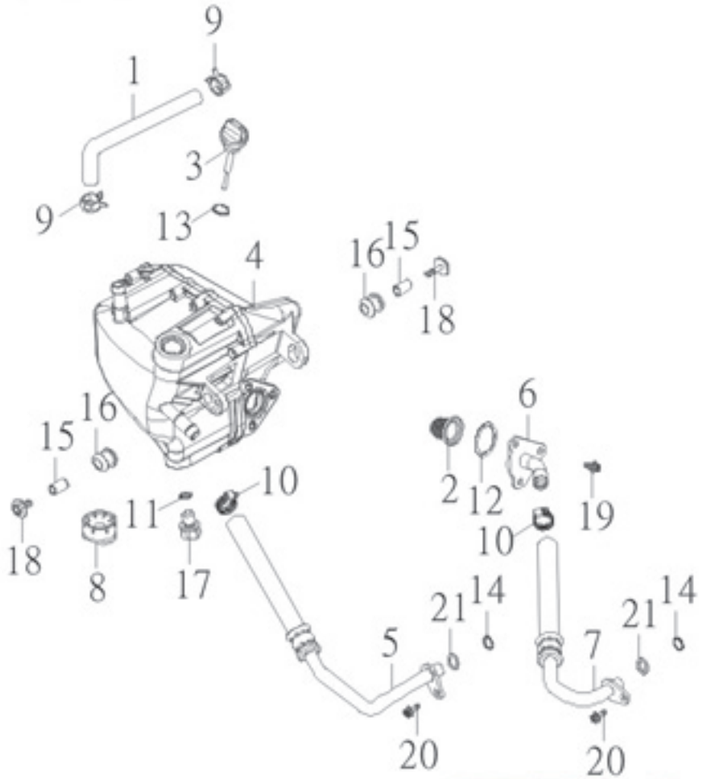

NO.	PARTS NO.	PARTS NAME		Q'TY	NOTE
1	13424-CGV-00	HOSE	機油箱通氣管	1	
2	15536-CHP-00	SCREEN, OIL FILTER	濾油網	1	
3	15563-CGV-00	GAUGE, OIL LEVEL	量油尺	1	
4	43310-CGV-00	OIL TANK	機油箱	1	
5	43320-CGV-00	HOSE, OIL IN	機油箱入油管	1	
6	43323-CGV-00	JOINT, HOSE	出油管接頭	1	
7	43325-CGV-00	HOSE, OIL EX	機油箱出油管	1	
8	52735-KHB-00	RUBBER REAR FENDER	座墊後減震墊	1	
9	90220-12178-C	CLIP 12*17.8	板型管夾	2	
10	90280-080023-B	CLIP HC1430SS	美式管夾	2	
11	9321V-19098	O-RING 1.9*9.8	護油圈	1	
12	9321V-20280	O-RING 2.0*28	護油圈	1	
13	9321V-30180	O-RING 3.0*18	護油圈	1	
14	9321V-35125	O-RING 3.55*12.5	護油圈	2	
15	93510-071017-B	COLLAR	機油箱軸環	2	
16	93580-101919	GROMMET	機油箱套環	2	
17	94710-12015-B	BOLT	洩油螺栓	1	
18	96218-06025-B	BOLT, HEXAGON WITH WASHER	六角螺栓附墊圈	2	
19	96414-06010-B	BOLT, FLANGE	凸緣螺栓	3	
20	96414-06016-C	BOLT, FLANGE	凸緣螺栓	2	
21	97221-131830	WASHER, PLASTIC	塑膠墊圈	2	

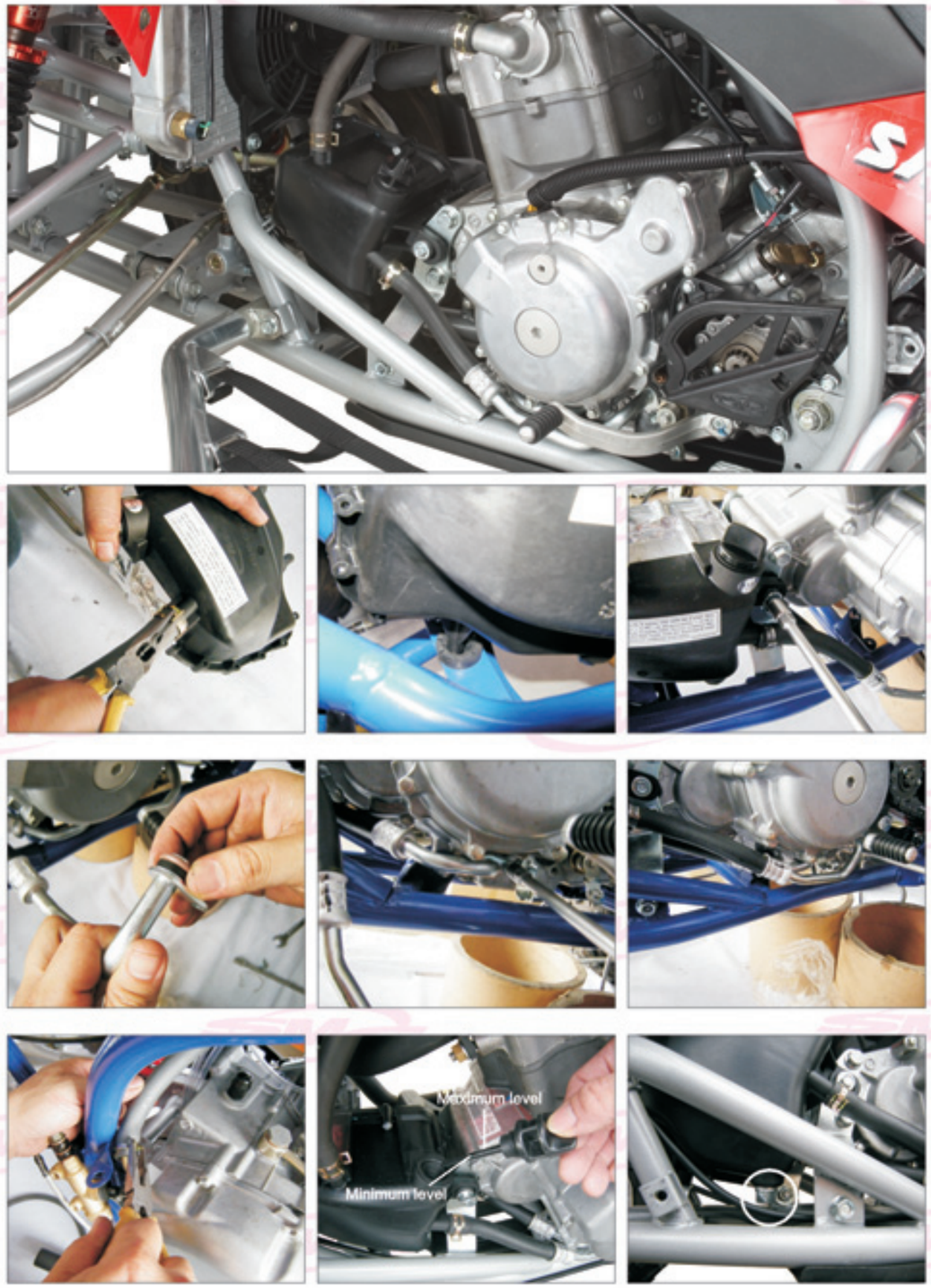

WATER-COOLING SYSTEM 水冷卻系統

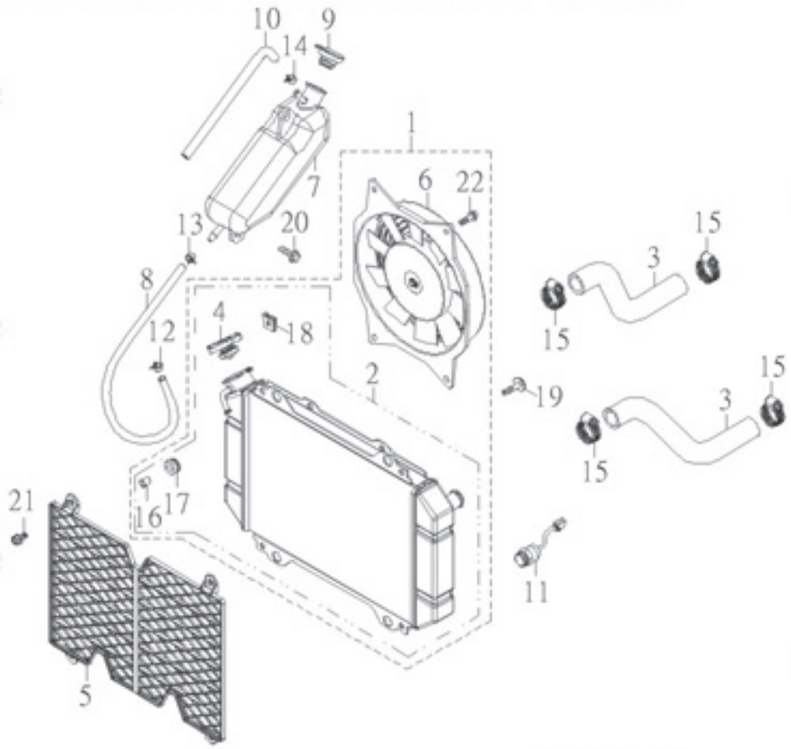

NO.	PARTS NO.	PARTS NAME		Q'TY	NOTE
1	43400-CGV-00	RADIATOR ASS'Y	水箱總成	1	
2	43410-CGV-00	RADIATOR	水箱	1	
3	43425-CGV-00	HOSE, WATER PUMP IN	水泵進水管	2	
4	43430-CGV-00	RADIATOR CAP	水箱蓋	1	
5	43440-CGV-00	RADIATOR DEFEND	水箱護罩	1	
6	43450-CGV-00	FAN MOTOR ASS'Y	風扇馬達總成	1	
7	43460-CEE-00	WATER TANK	副水箱	1	
8	43463-CGV-00	HOSE 1, WATER TANK	副水箱溢流管	1	
9	43466-CEE-00	CAP, WATER TANK	副水箱蓋	1	
10	43468-CEE-00	HOSE 2, WATER TANK	副水箱通氣管	1	
11	62750-CGV-00	FAN MOTOR SWITCH	風扇開關	1	
12	90220-08100-B	CLIP 8*10	板型管夾	1	
13	90220-08110-B	CLIP 8*11	板型管夾	1	
14	90220-10138-K	CLIP 10*13.8	板型管夾	1	
15	90281-090032-C	CLIP ZHC 430SS	斑馬式管夾	4	
16	93510-070910-B	COLLAR 7.5*9.5*10.5	軸環	4	
17	93580-091911	GROMMET	套環	4	
18	95101-091320	NUT, SPRING	U型板螺帽	8	
19	96214-06022-B	BOLT, HEXAGON WITH WASHER	六角螺栓附墊圈	4	
20	96218-06016-B	BOLT, HEXAGON WITH WASHER	六角螺栓附墊圈	2	
21	96414-06012-B	BOLT, FLANGE	凸緣螺栓	4	
22	96614-06018-B	BOLT, HEXAGON WITH WASHER	六角十字穴螺栓附墊圈	4	

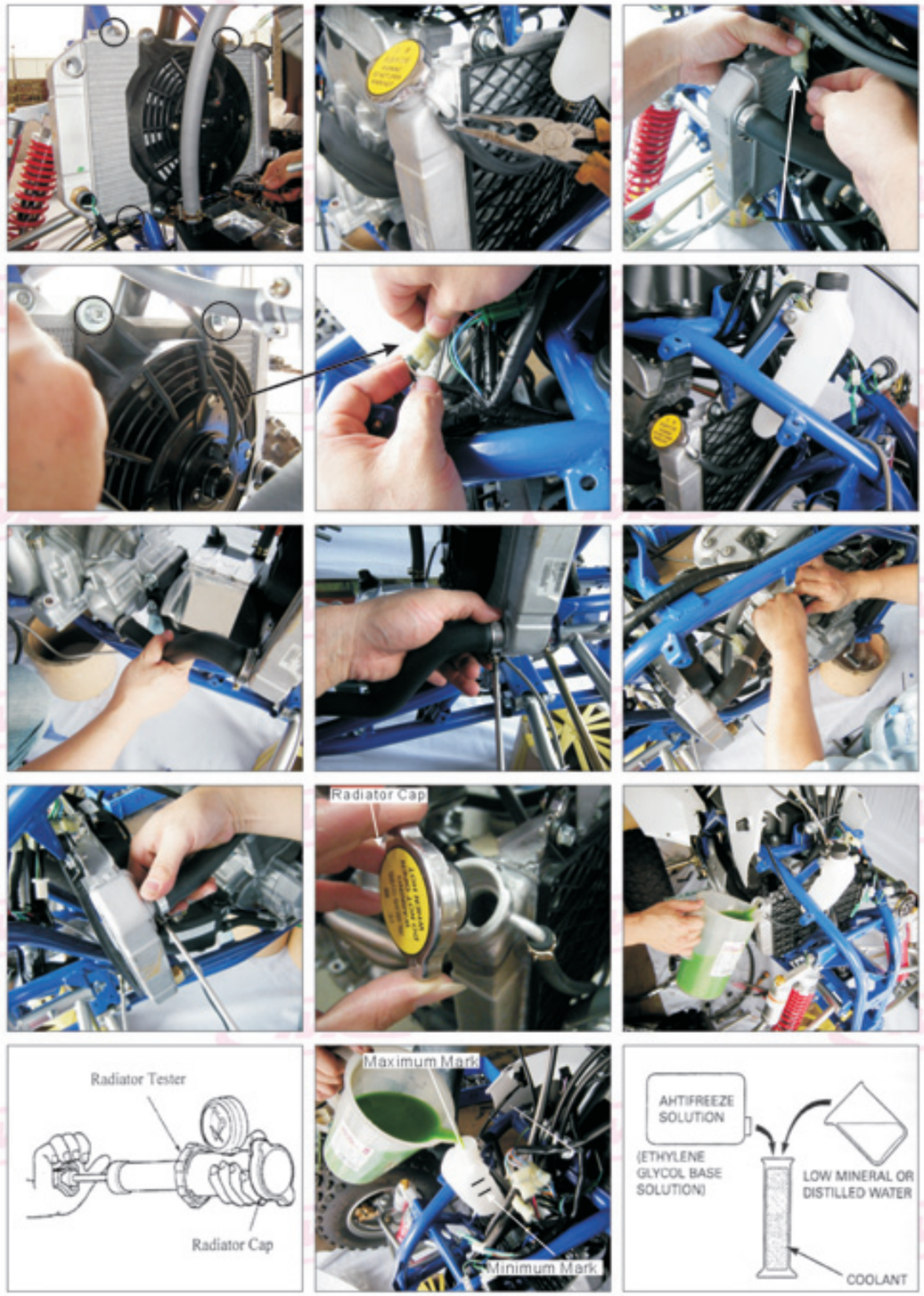

WATER PUMP 水泵

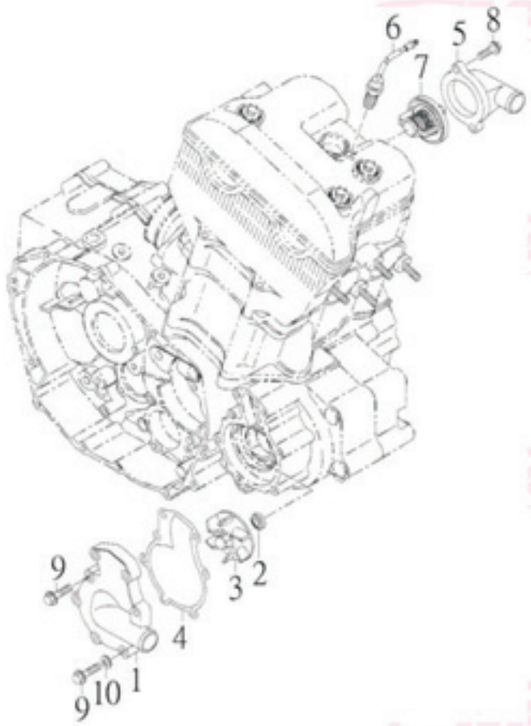

NO.	PARTS NO.	PARTS NAME		Q'TY	NOTE
1	13012-CGV-00	WATER PUMP COVER	水泵蓋	1	
2	13023-CGV-00	WATER SEAL B	水封B	1	
3	13024-CGV-00	FAN	水泵葉輪	1	
4	13051-CGV-00	WASHER, PUMP COVER	水泵蓋墊片	1	
5	62732-CGV-00	THERMOSTAT COVER	節溫器蓋	1	
6	62740-CGV-00	THERMO SENSOR (110 DEG)	溫度感測器	1	
7	62745-CGV-00	THERMOSTAT 71°C	節溫器	1	
8	96411-06020-B	BOLT, FLANGE	凸緣螺栓	2	
9	96411-06025-B	BOLT, FLANGE	凸緣螺栓	7	
10	97230-061310	WASHER, COPPER 6.1*13*1	銅墊圈	1	

WIRE HARNESS 主電路配線

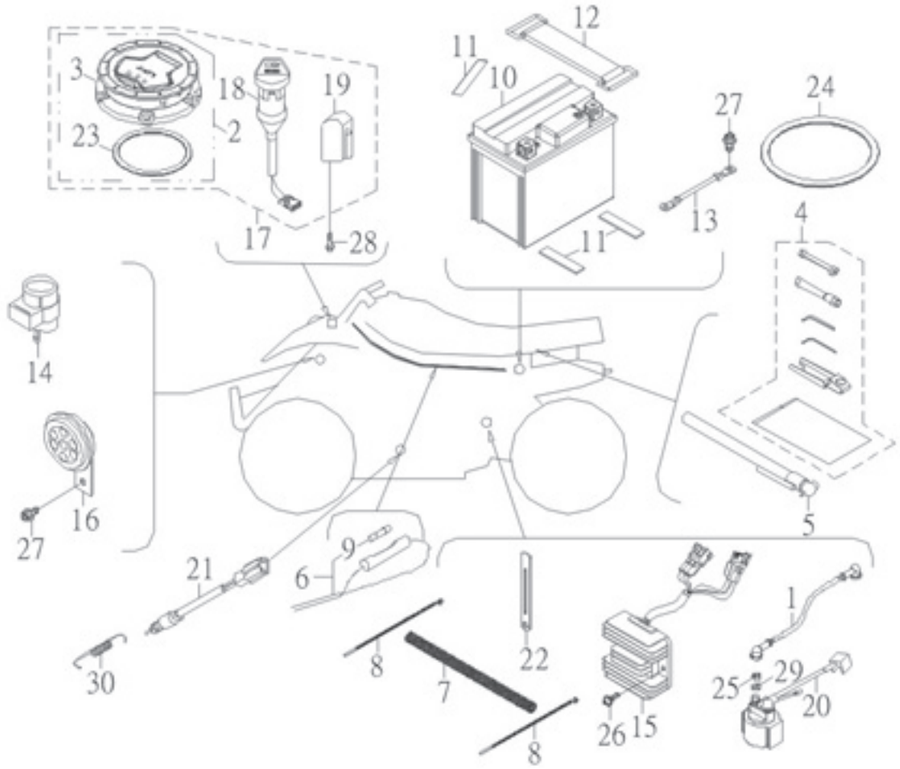

NO.	PARTS NO.	PARTS NAME		Q'TY	NOTE
1	35831-CGV-00	CABLE, STARTER MOTOR	起動馬達導線	1	
2	43102-CGV-00	CAP ASS'Y	汽油箱蓋總成	1	
3	43113-CGV-00	CAP STEADY	汽油箱蓋座	1	
4	56100-CGV-00	TOOL SET	工具包	1	
5	56190-RAM-00	GAUGE, AIR	胎壓計	1	
6	61120-CGV-00	WIRE, HARNESS	主配線總成	1	
7	61134-CGV-00	WAVY TUBE	波浪管	1	
8	61135-SK2-00	BAND, CORD 2.5*100L	束帶	2	
9	61151-CHP-00	FUSE (15A250V)	保險絲	1	
10	62100-MLS-00	BATTERY ASS'Y (YT12A-BS)	蓄電池總成	1	
	62100-MLS-01	BATTERY ASS'Y (GT12A-BS)	蓄電池總成	1	
11	62111-CGV-00	BATTERY PACKING	蓄電池襯墊	3	
12	62112-CHP-00	BAND, BATTERY	電瓶束套	1	
13	62120-RAM-00	CABLE, EARTH	蓄電池接地線	1	
14	62350-CGV-00	FLASHER RELAY ASSEMBLY	方向警報斷續器總成	1	
15	62360-CGV-00	RECTIFIER & REGULATOR COMP	整流穩壓器	1	
16	62370-NAF-00	HORN	喇叭	1	
17	62500-CGV-00	KEY SET	鎖組	1	
18	62501-CGV-00	MAIN SWITCH ASS'Y	主開關總成	1	

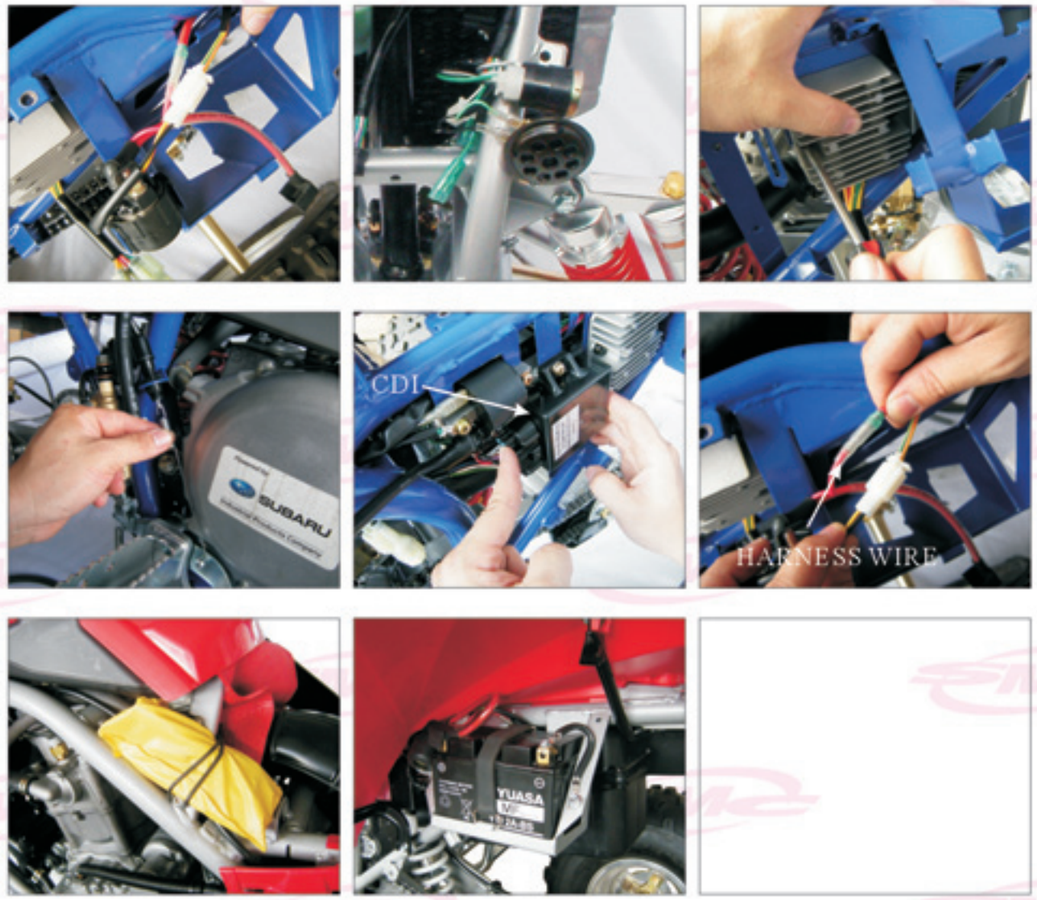

NO.	PARTS NO.	PARTS NAME		Q'TY	NOTE
19	62503-RAM-00	LOCK COMP, STEERING HANDLE	轉向舵鎖	1	
20	62550-RAM-00	STARTER RELAY SWITCH COMP	起動開關組	1	
21	62980-CHP-00	SWITCH ASS'Y, REAR STOP	剎車燈後置開關	1	
22	91112-10100-B	FOLDER	導線軟勾	1	
23	93210-26489	O-RING 2.62*48.9	護油圈	1	
24	93210-35900	O-RING 3.5*90	護油圈	1	
25	95201-061005-B	NUT, HEXAGON	六角螺帽	1	
26	96312-06020-C	SCREW, PAN HEAD WITH WASHER	十字孔頭螺絲附墊圈	2	
27	96414-06012-B	BOLT, FLANGE	凸緣螺栓	2	
28	96613-05012-B	BOLT, HEXAGON WITH WASHER	六角十字穴螺栓附墊圈	2	
29	97301-061215-B	WASHER, SPRING	彈簧墊圈	1	
30	97506-1272147-B	SPRING, STOP SWITCH	剎車開關拉伸彈簧	1	

GENERATOR 發電機

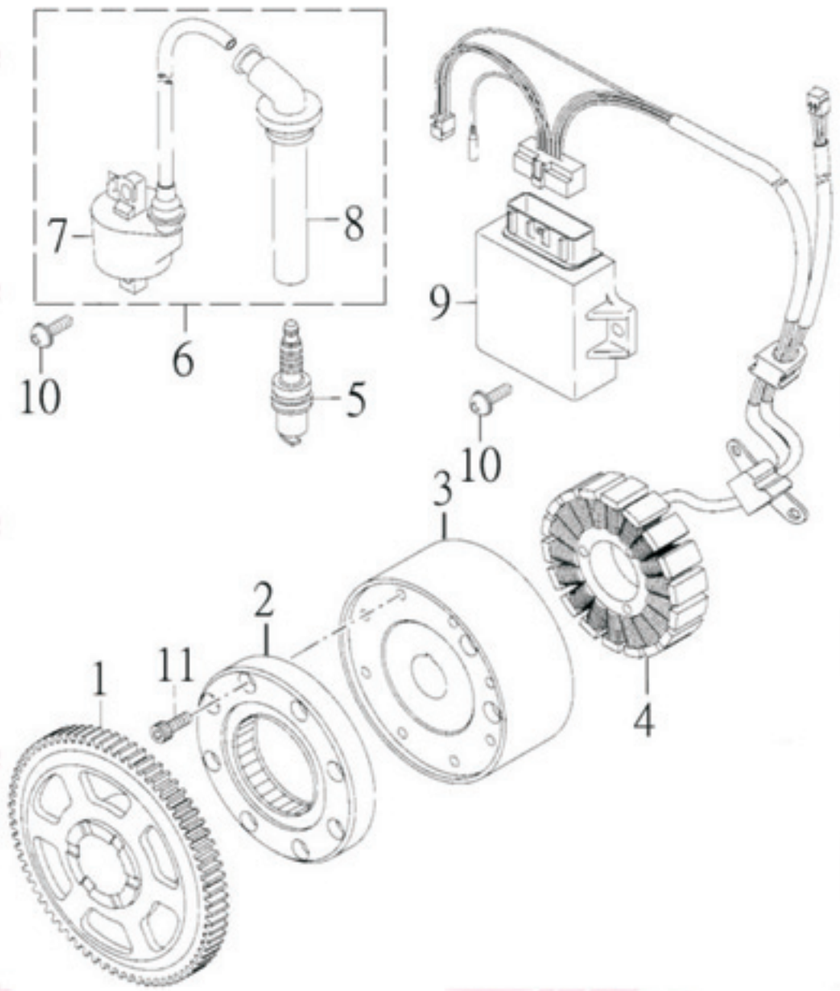

NO.	PARTS NO.	PARTS NAME		Q'TY	NOTE
1	23524-CGV-00	STARTER GEAR 72T	起動輪	1	
2	23570-CGV-00	ONE WAY CLUTCH ASS'Y	起動離合器總成	1	
3	35550-CGV-00	ROTOR ASSEMBLY	轉子總成	1	
4	35560-CGV-00	BASE ASSEMBLY	發電機座總成	1	
5	62210-CGV-00	PLUG, SPARK (DCPR8E)	火星塞	1	
6	62310-CGV-00	IGNITION COIL ASS'Y	點火線圈總成	1	
7	62311-CGV-00	IGNITION COIL	點火線圈	1	
8	62320-CGV-00	PLUG CAP ASS'Y	火星塞蓋總成	1	
9	62540-CGV-00	C.D.I UNIT ASS'Y	電腦總成	1	
10	96312-06020-C	SCREW, PAN HEAD WITH WASHER	十字孔頭螺絲附墊圈	4	
11	96510-06018-K	BOLT, SOCKET	六角承窩螺栓	8	

HEADLIGHT 前燈

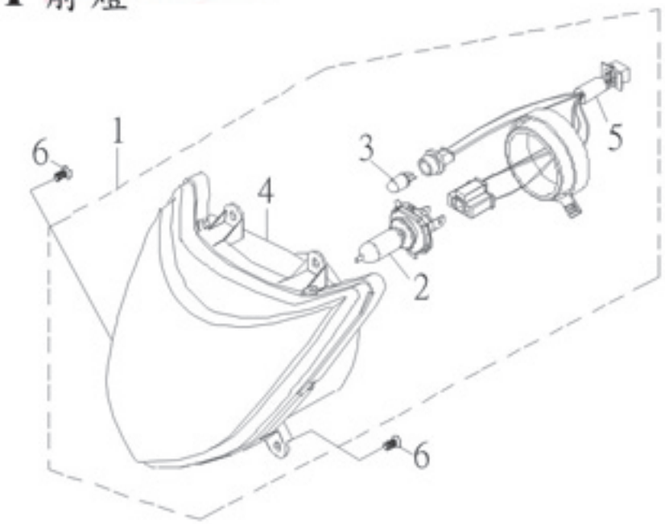

NO.	PARTS NO.	PARTS NAME		Q'TY	NOTE
1	55300-CEW-00	HEAD LIGHT ASS'Y	前燈總成	1	
2	55314-CEW-00	BULB, HEAD LIGHT H4 12V35/35W	前燈燈泡	1	
3	55316-NGF-00	BULB, POSITION LAMP 12V 5W	位置燈燈泡	1	
4	55320-CEW-00	LENS ASS'Y	前燈單元總成	1	
5	55340-CEW-00	SOCKET CORD ASS'Y	燈座總成	1	
6	96112-51216-K	SCREW, TAPPING	自攻螺絲	4	

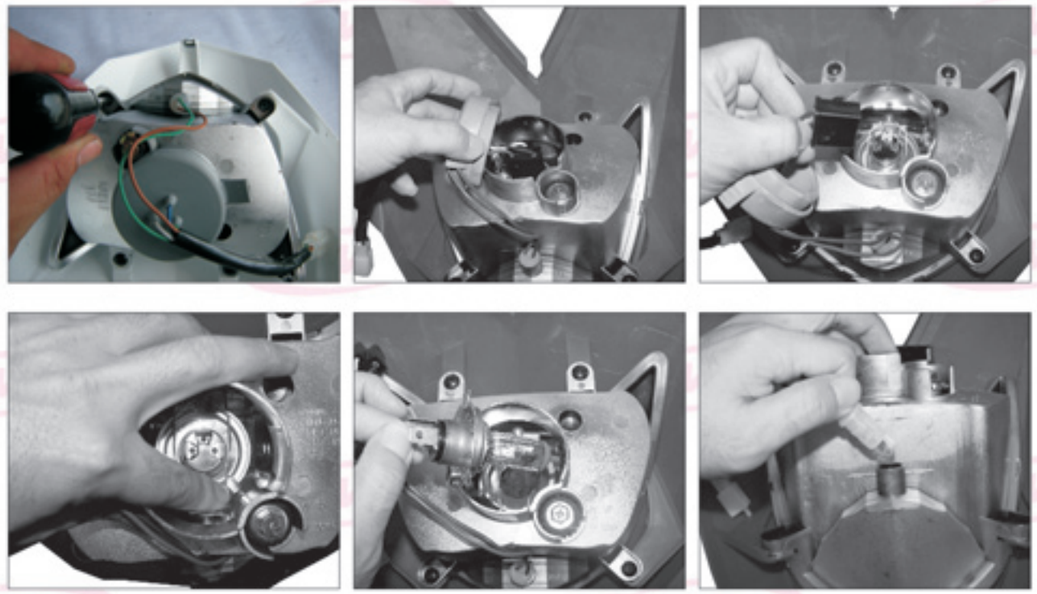

FLASHER 方向燈

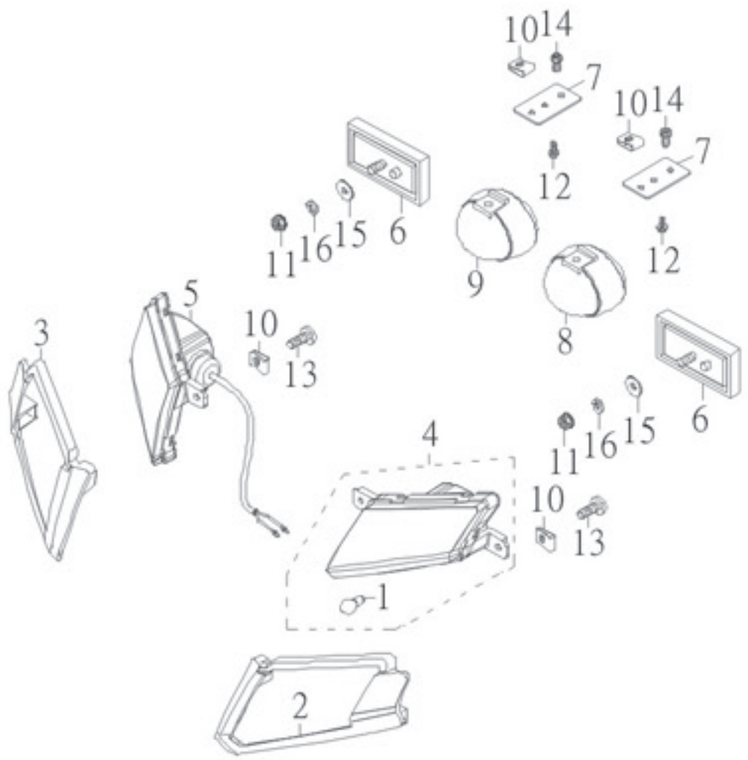

NO.	PARTS NO.	PARTS NAME		Q'TY	NOTE
1	55311-JOW-00	BULB FLASHER RY10W 12V 10W	方向燈泡	2	
2	55336-CGW-00	FLASHER STEADY, L FRT	左前方向燈固定座	1	
3	55346-CGW-00	FLASHER STEADY, R FRT	右前方向燈固定座	1	
4	55350-CGW-00	WINKER ASS'Y, L FRONT	前方向燈組左	1	
5	55360-CGW-00	WINKER ASS'Y, R FRONT	前方向燈組右	1	
6	55722-NCF-01	REFLECTOR	反射片	2	
7	55736-CGW-00	LOCK, WINKER	後方向燈固定座	2	
8	55750-CGV-00B	WINKER ASS'Y, L REAR	後方向燈組左	1	
9	55760-CGV-00B	WINKER ASS'Y, R REAR	後方向燈組右	1	
10	95101-05012	NUT, SPRING	U型板螺帽	8	
11	95401-050805-B	NUT, FLANGE	凸緣螺帽	2	
12	96108-51216-K	SCREW, TAPPING	自攻螺絲	4	
13	96112-51616-K	SCREW, TAPPING	自攻螺絲	4	
14	96612-05012-B	BOLT, HEXAGON WITH WASHER	六角十字穴螺栓附墊圈	2	
15	97201-051610-B	WASHER, PLANE	平面墊圈	2	
16	97301-061215-B	WASHER, SPRING	彈簧墊圈	2	

TAIL LIGHT 後燈

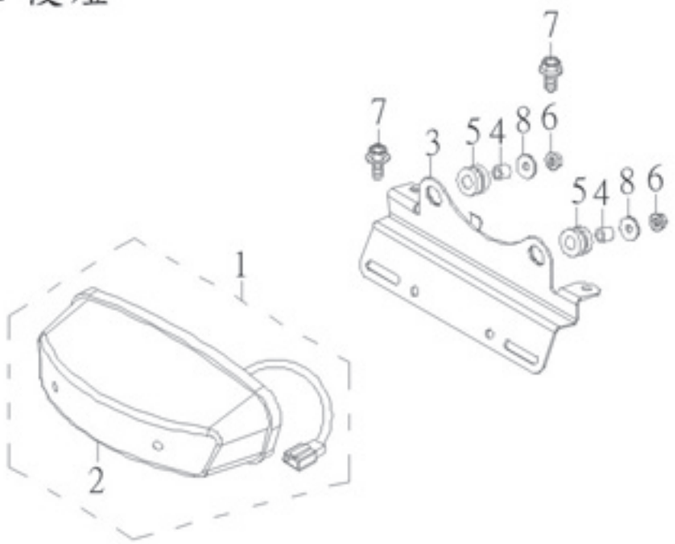
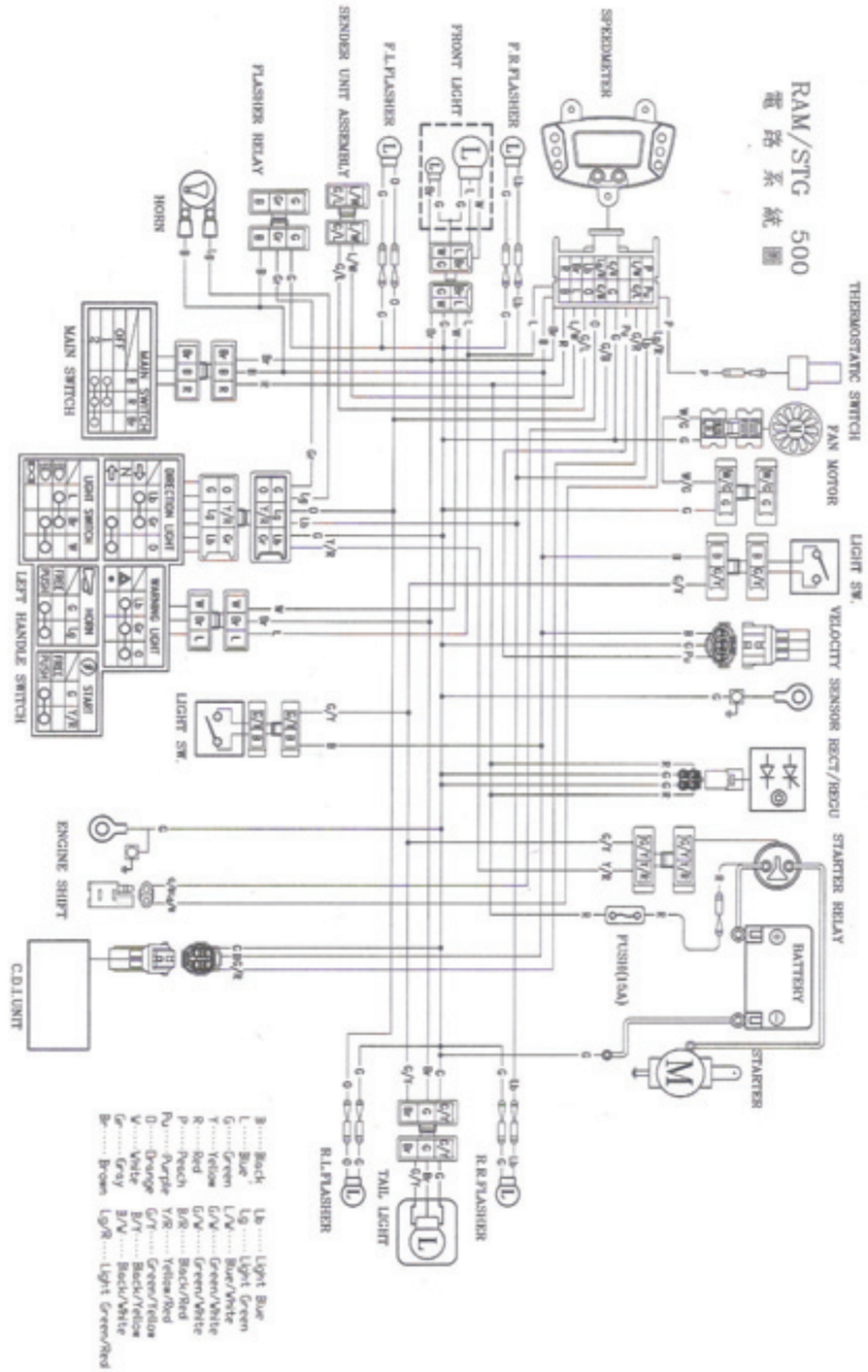
NO.	PARTS NO.	PARTS NAME		Q'TY	NOTE
1	55700-CGV-00B	TAIL LIGHT ASS'Y	後燈總成	1	
2	55721-CBW-01	LENS, TAIL LIGHT	後燈罩	1	
3	55726-CBW-00	HOLDER, TAIL LIGHT	後燈固定座	1	
4	93510-061010	COLLAR	牌照板軸環	2	
5	93580-102212	GROMMET	牌照板套環	2	
6	95401-061006-B	NUT, FLANGE	凸緣螺帽	2	
7	96414-06012-B	BOLT, FLANGE	凸緣螺栓	2	
8	97201-061820-B	WASHER, PLATE	平面墊圈	2