Estelar

<< BACK

1 CHASSIS

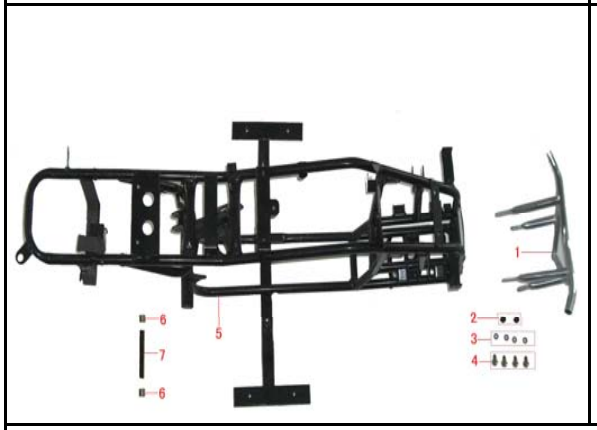

2 PLASTIC COVERS

3 REAR SWINGARM

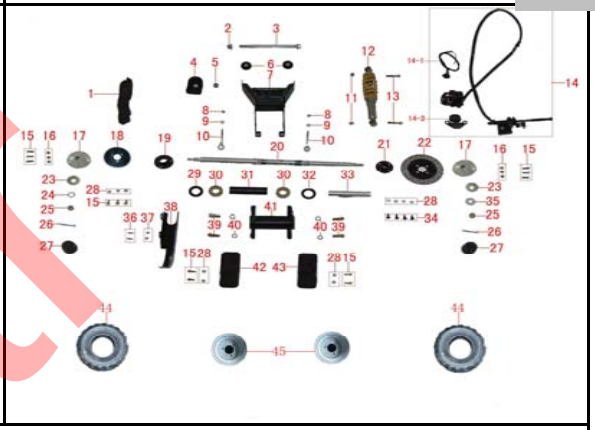

4 FRONT SUSPENSION

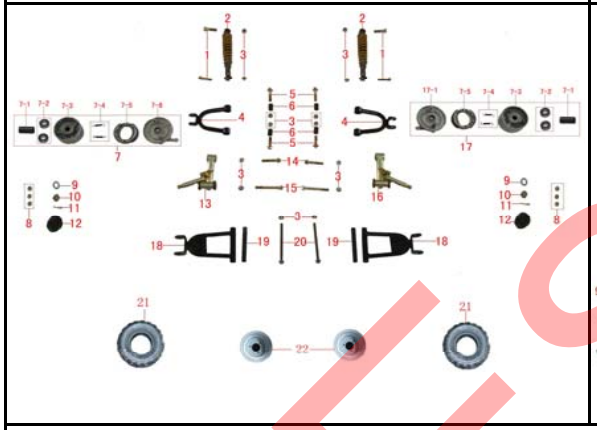

5 ELECTRICALS

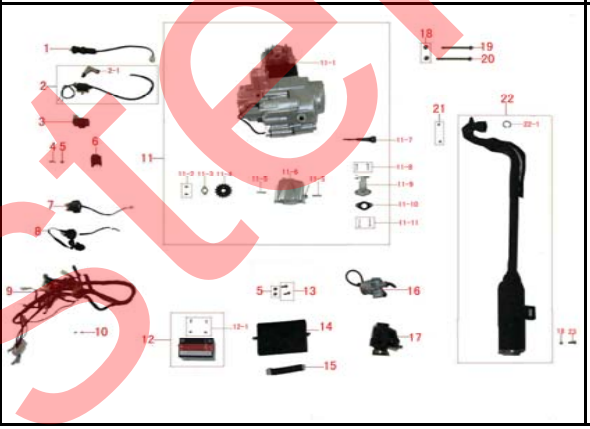

6 STEERING

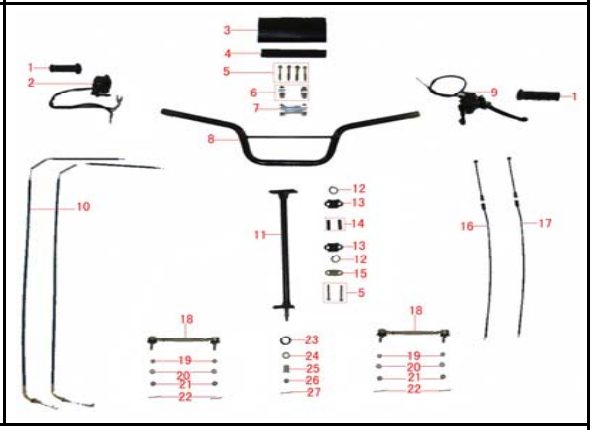

E-1气缸头/气缸体(CYLINDER HEAD/CYLINDER

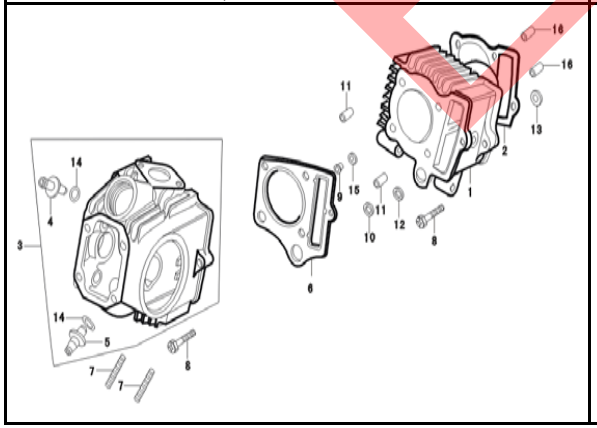

E-2 气缸头盖（COVER,CYLINDER HEAD）

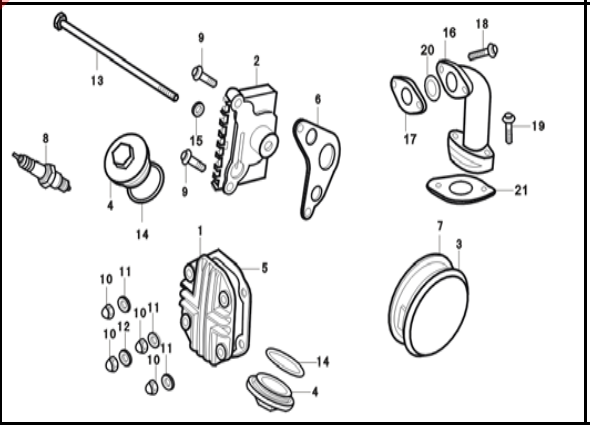

E-3 气门组件（CAMSHAFT/VALVE）

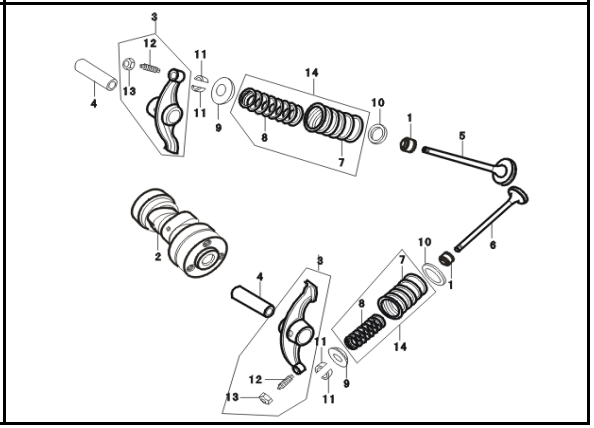

Estelar

<< BACK

E-4 RIGHT CRANKCASE COVER

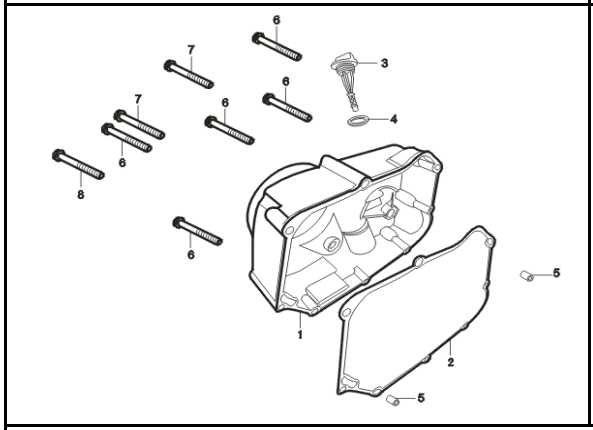

E-5 CRANKCASE/OIL PUMP

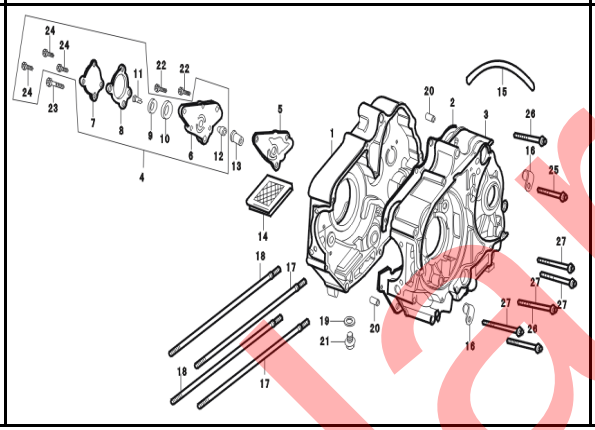

E-6 CLUTCH

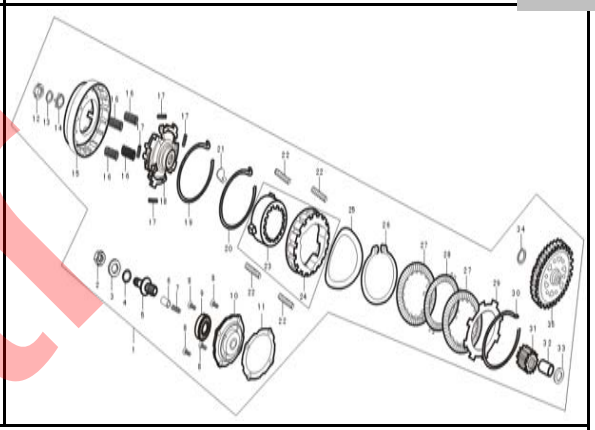

E-7 GENERATOR/LEFT CRANKCASE COVER

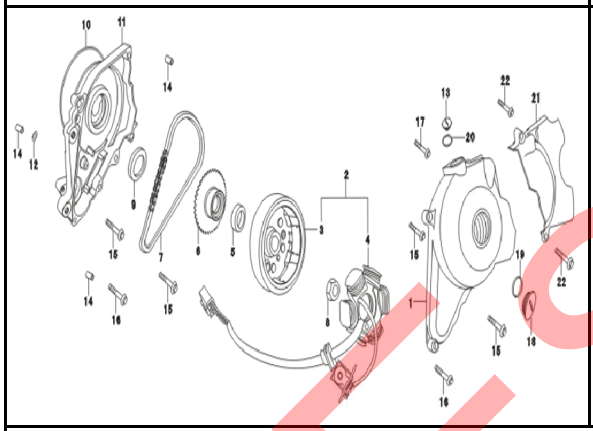

E-8 PISTON/CRANKSHAFT COMP

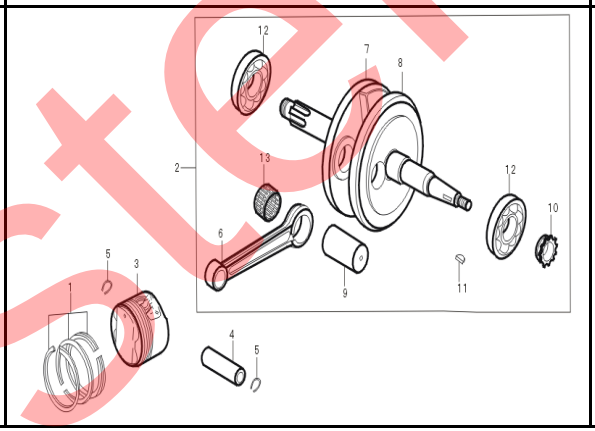

E-9 MAINSHAFT\COUNTERSHAFT ASSY

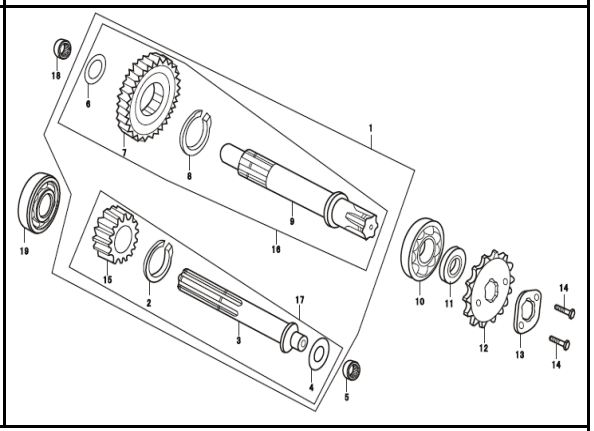

E-10 CAM CHAIN/TENSIONER

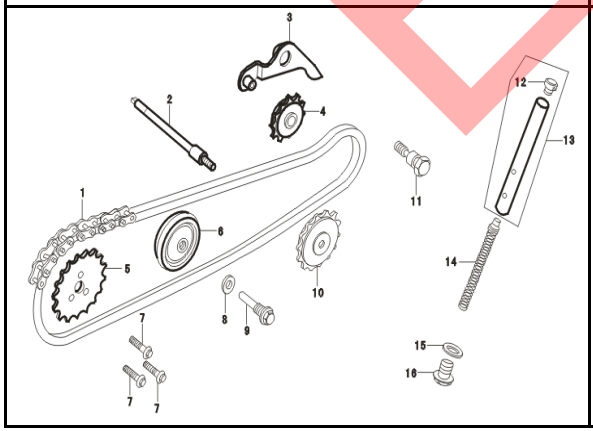

E-11 KICK STARTER SPINDLE

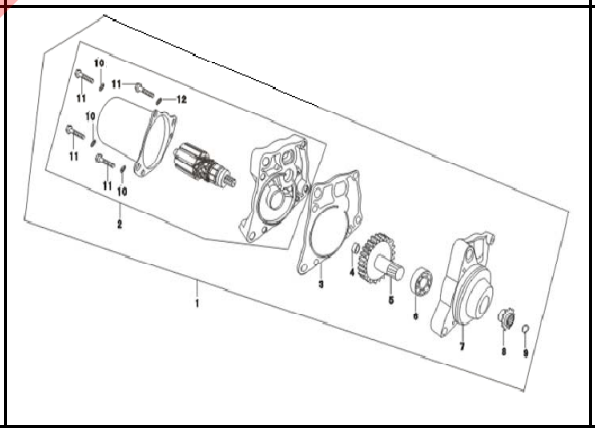

Estelar

<< BACK

1 CHASSIS

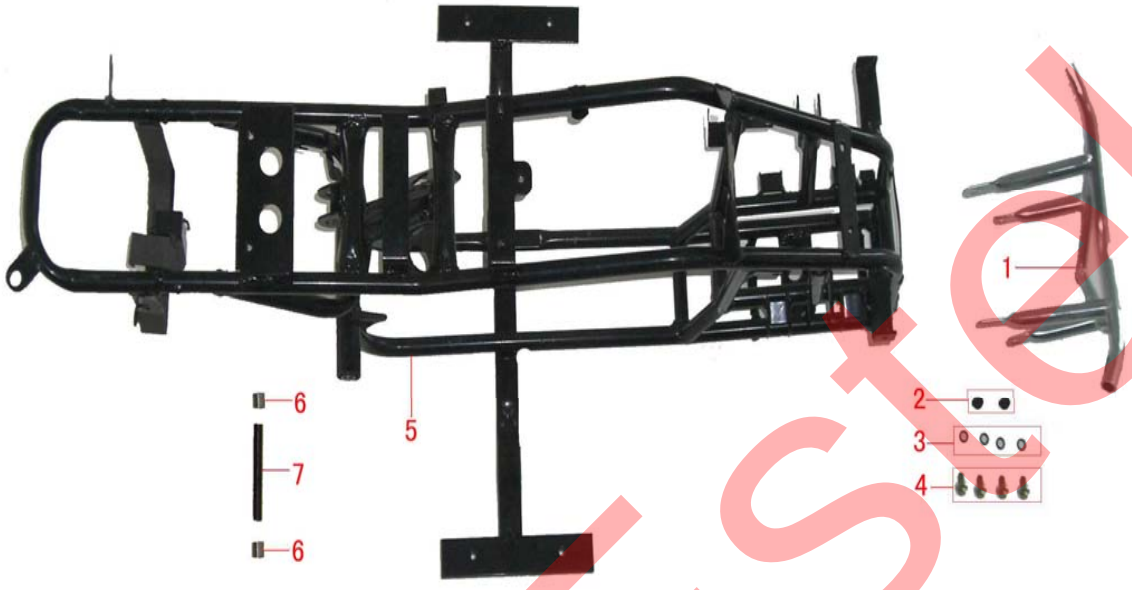

序号 S.N	零部件代号 Part NO.	英文名称 English part Name	状态 Condition	数量 Quantity
1	1.4.06.0020	bumper		1
2	1.4.02.1010	Bumper block		2
3	0.04.00710	spring washer 8		4
4	0.01.05120	Bolt M8*16 yellow zinc plated		4
5	1.1.06.0012	frame	仅适用于塑料油箱(only for plastic fuel tank)	1
6	1.3.02.0050	spacer washer for rear swingarm		2
7	1.3.06.0030	sleeve for rear swingarm		1

Estelar

<< BACK

2 PLASTIC COVERS

序号 S.N	零部件代号 Part NO.	英文名称 English part Name	状态 Condition	数量 Quantity
1	5.2.06.0010	headlight		1
1-1	5.2.02.0110	bulb for small headlight		2
1-2	5.2.06.0020	bulb for big headlight		1
2	0.02.02650	cross recess head screw ST4.2*14		8
3	0.04.01650	washer 4		4
4	0.02.02650	cross recess head screw ST4.8*14		10
5	0.01.00420	bolt M6*16 yellow zinc plated		2
6	6.2.06.005001	front panel (black)		1
7	0.03.02920	Nut M6		12
8	0.04.00150	washer 6		12
9	6.2.02.0130	307 rubber washer		12
10	8.1.02.0030	mashroom head bolt M6*16		16
11	6.2.06.003001	front body cover (black)		1
12	6.2.06.0010	footrest left		1
13	2.9.06.0010	fuel tank assy	塑料油箱(plastic fuel tank)	1
13-1	2.9.06.0020	fuel tank cap	仅适用于塑料油箱(only for plastic fuel tank)	1
14	2.9.06.0030	switch for fuel tank	仅适用于塑料油箱(only for plastic fuel tank)	1
15	2.9.02.0030	fuel pipe		1
16	6.2.06.0020	footrest right		1
17	0.01.00420	mashroom head bolt M6*16		2
18	6.2.06.004001	rear body cover (black)		1
19	6.1.04.0020	washer for seat		2
20	6.1.06.0010	seat		1
21	5.2.02.0050	rear reflector (red)		1
22	1.4.02.0040	bracket for taillight		1
23	5.2.02.0011	taillight		1

Estelar

3 REAR SWINGARM (1/2)

<< BACK

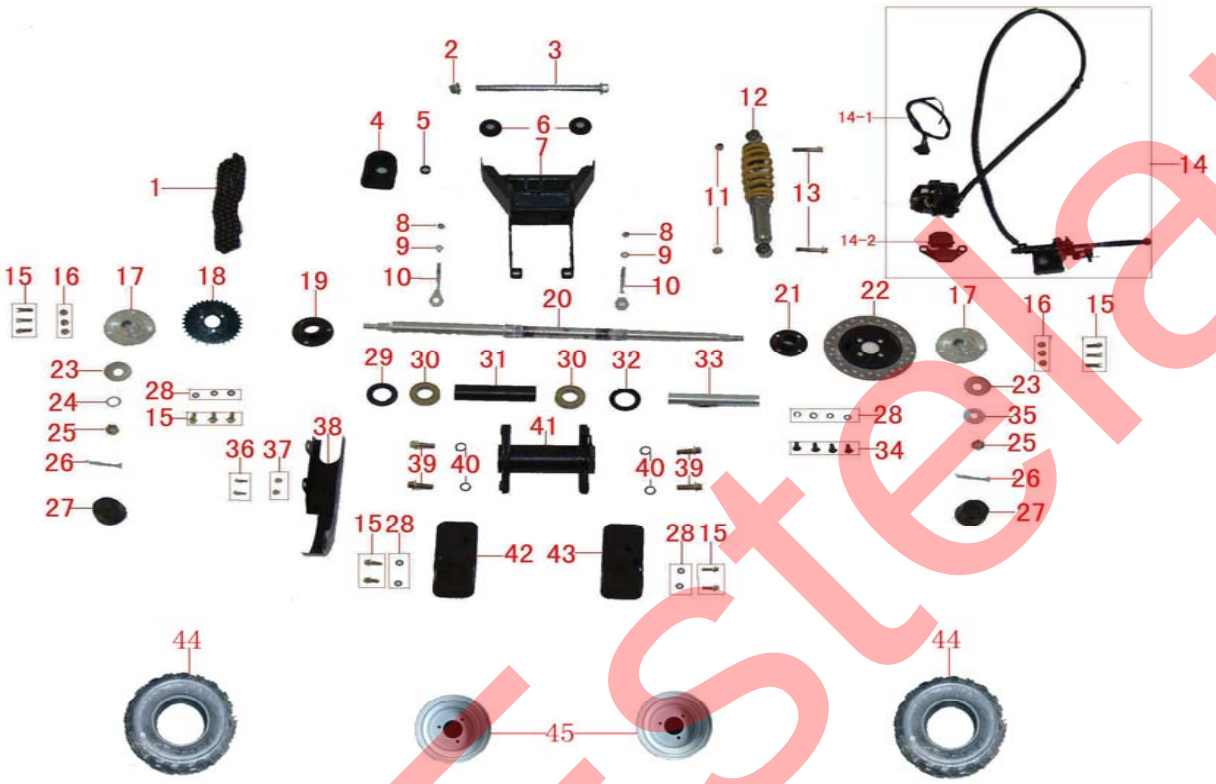

序号 S.N	零部件代号 Part NO.	英文名称 English part Name	数量 Quantity
1	2.3.06.0020	chain 420-72	1
2	0.03.00850	nut M14*1.4	1
3	1.3.06.0051	Bolt M14*1.5*230 for rear swingarm	1
4	4.1.06.0140	abrasion-resistant cover	1
5	4.1.06.0150	spacer washer abrasion-resistant cov	1
6	1.2.02.0080	Steel sheet washer	2
7	1.3.06.0011	rear swingarm	1
8	0.03.02250	locknut M8	2
9	0.04.00350	washer 8	2
10	4.1.03.0120	rear jack	2
11	0.03.00520	Nut M10*1.25	2
12	4.2.06.0020	Rear shock absorber	1
13	0.01.07420	Bolt M10*1.25*42	2
14	4.3.02.0010	rear hydraulic disc brake	1
14-1	5.3.02.0250	cable for brake switch	1
14-2	4.3.02.0030	brake pads	1 set(2 Pcs)
15	0.01.00920	bolt M8*20 yellow zinc plated	13
16	0.03.00120	nut M8 yellow zinc plated	6
17	4.1.02.0251	rear wheel hub	2
18	4.1.02.1300	sprocket 420-29	1
	4.1.02.1310	sprocket 420-37	1
19	4.1.02.0031	Housing for sprocket	1
20	4.1.02.0012	rear axle	1
21	4.1.02.0061	seat for brake disc	1
22	4.1.02.0073	brake disc	1
23	4.1.02.0130	dustproof washer	2
24	0.04.03050	washer 14*28*2	1
25	0.03.01620	slotted nut M14*1.5	2
26	0.08.02100	cotter pin 2.5*30	2

Estelar

3 REAR SWINGARM (2/2)

<< BACK

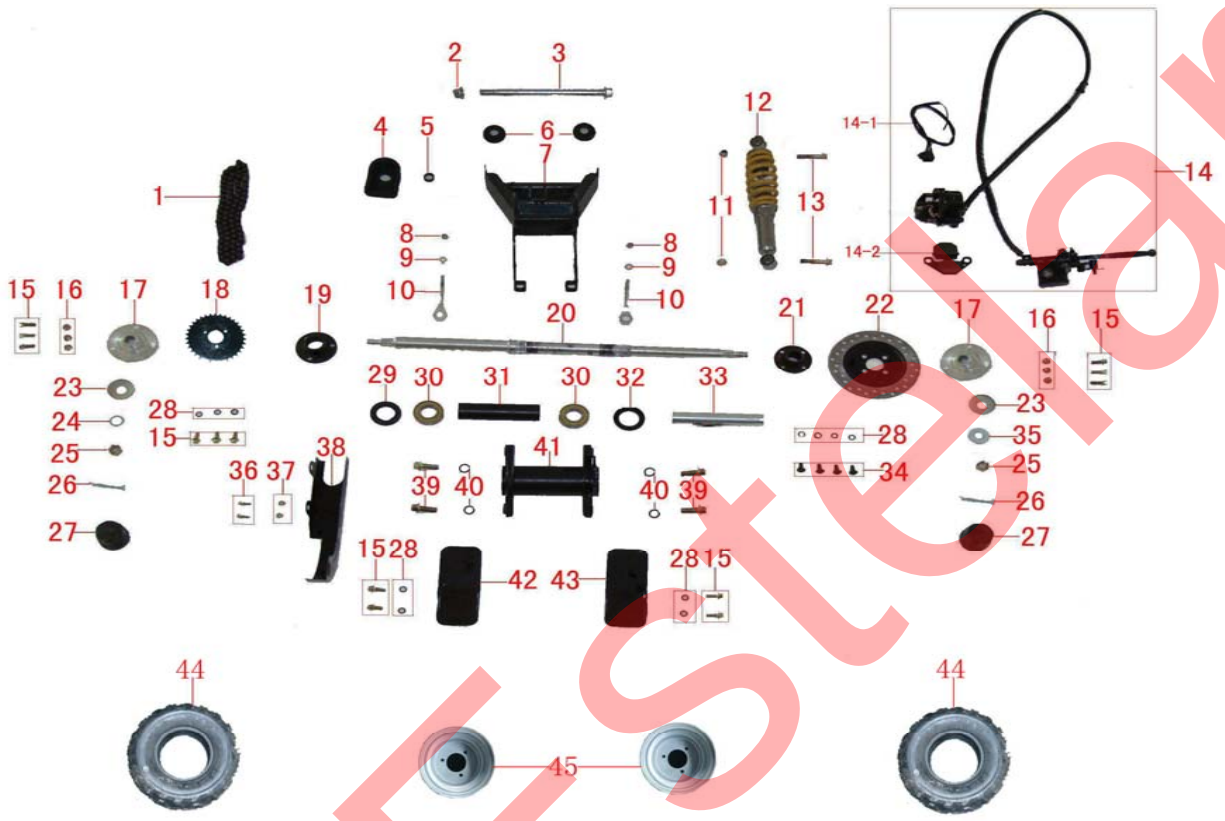

序号 S.N	零部件代号 Part NO.	英文名称 English part Name	数量 Quantity
27	4.1.02.0100	dustproof cover	2
28	0.04.00710	spring washer 8	19
29	0.07.00100	oil seal 35*52*8	2
30	0.05.01800	bearing 6205	2
31	4.1.02.0460	sleeve for seat of rear swingarm	1
32	0.07.00200	oil seal 32*52*8	2
33	4.1.02.0081	right sleeve for rear axle	1
34	0.02.02340	hexagon cap head screw M8*16	4
35	0.04.02850	washer 14*39*5	1
36	0.01.00420	bolt M6*16	2
37	0.03.00220	nut M6	2
38	4.1.02.0120	Up protecting cover for sprocket	1
39	0.01.04520	bolt M12*1.25*30	4
40	0.04.00910	spring wahser 12	4
41	4.1.02.0021	seat of rear swingarm	1
42	4.1.02.0140	down protecting cover for sprocke	1
43	4.1.02.0270	down protecting cover for brake di	1
44	4.1.02.0280	tyre14.5/7-7	2
45	4.1.02.0500	rear rim 7"	1

Estelar

4 FRONT SUSPENSION

<< BACK

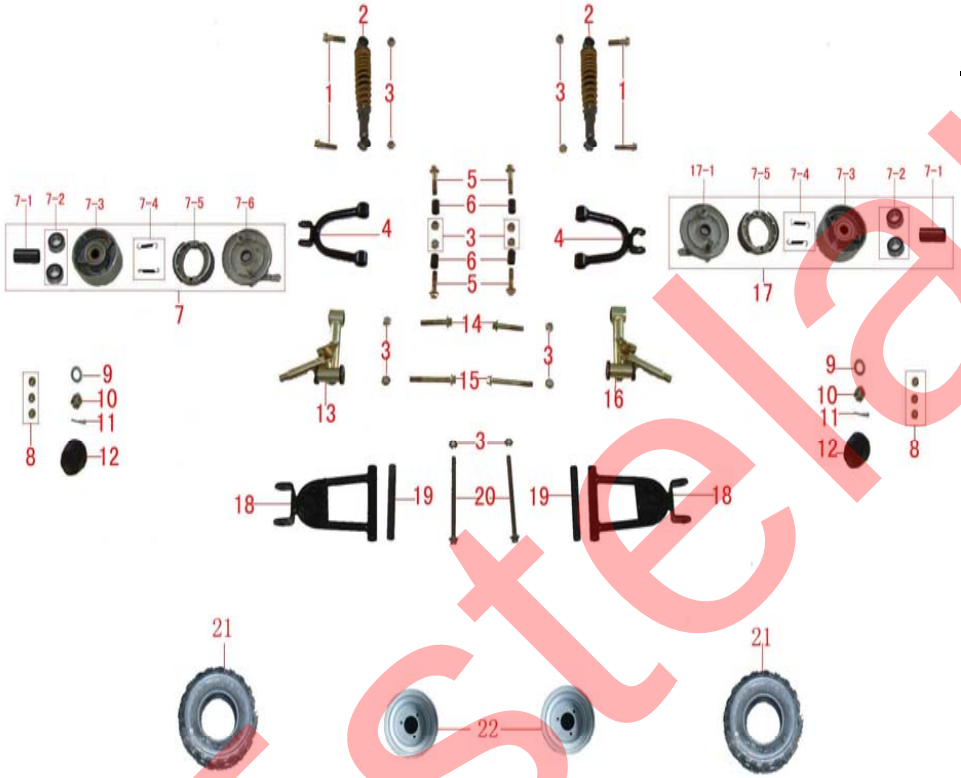

序号 S.N	零部件代号 Part NO.	英文名称 English part Name	数量 Quantity
1	0.01.07420	Bolt M10*1.25*42	4
2	4.2.06.0010	front shock absorber	2
3	0.03.00520	Nut M10*1.25	14
4	1.3.02.0010	Up A-arm	2
5	0.01.05620	Bolt M10*1.25*45	4
6	1.3.02.0070	Sleeve for top A-arm	4
7	4.3.02.0050	front left drum brake assy	1
7-1	4.1.02.0221	sleever for front wheel hub	2
7-2	0.05.01400	bearing 6003Z	4
7-3	4.3.02.0130	front drum brake body	2
7-4	4.3.02.0070	brake shoes for front drum	4
7-5	4.3.02.0160	sping for front drum brake	4
7-6	4.3.02.0140	left side cover of drum brak	1
8	0.03.00120	nut M8	6
9	0.04.03050	washer 14*28*2	2
10	0.03.01620	slotted nut M14*1.5	2
11	0.08.02100	cotter pin	2
12	4.1.02.0100	dustproof cover for wheel	2
13	3.1.02.0013	Y-bone left	1
14	0.01.04620	Bolt M10*1.25*55	2
15	0.01.04320	Bolt M10*1.25*85	2
16	3.1.02.0023	Y-bone right	1
17	4.3.02.0060	right drum brake assy	1
17-1	4.3.02.0150	right cover for drum brake	1
18	1.3.06.0021	down A-arm	2
19	1.3.03.0050	sleeve for down A-arm	2
20	0.01.07220	Bolt M10*1.25*155	2
21	4.1.02.0280	front tyre 14.5/7-7	2
22	4.1.02.0500	rim 7"	2

Estelar

5 ELECTRICALS (1/2)

<< BACK

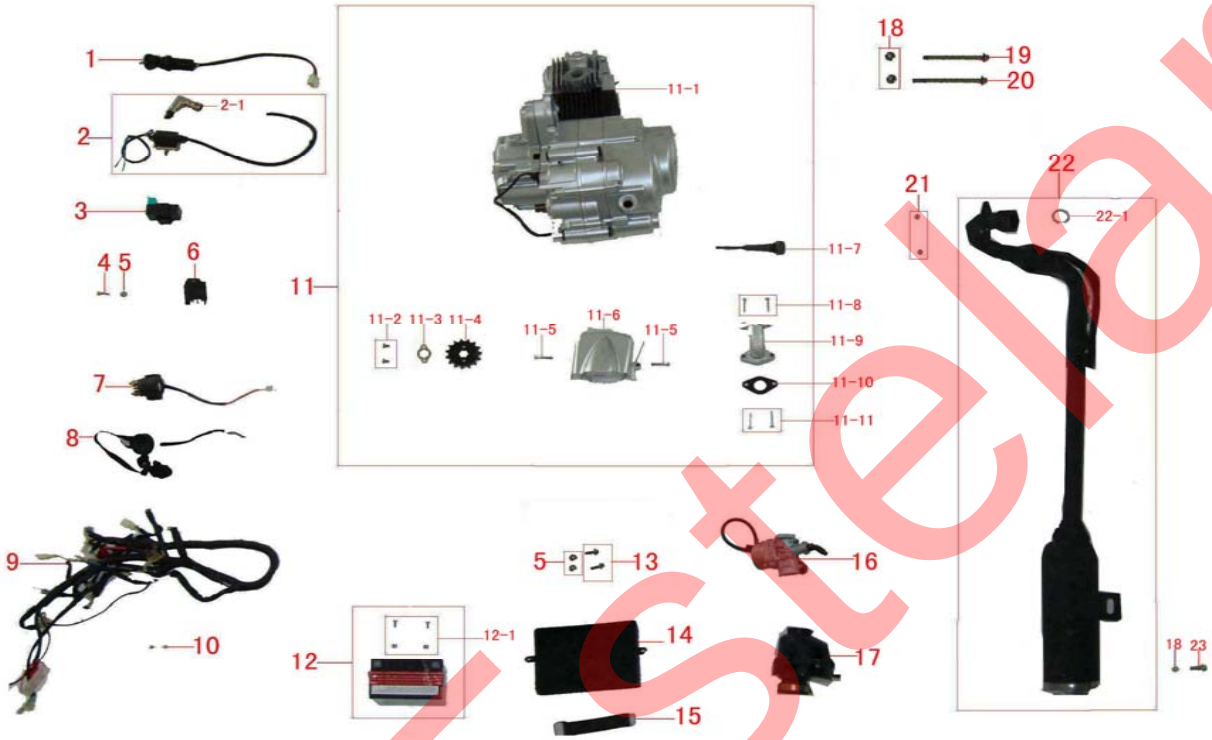

序号 S.N	零部件代号 Part NO.	英文名称 English part Name	数量 Quantity
1	5.3.04.0020	key switch	1
2	5.3.04.0092	voltage	1
2-1	5.3.04.5000	cap for voltage	1
3	5.3.02.0070	ignition	1
4	0.01.00320	Bolt M6*12	1
5	0.03.00220	nut M6	1
6	5.3.04.0071	regulator	1
7	5.3.02.0050	relay	1
8	5.3.02.0062	emergency switch	1
9	5.3.06.0015	main cable	1
10	5.3.02.0290	fuse	1
11	2.1.02.0024	70cc engine	1
11-1		engine assembly	1
11-2	380070004-0001	Bolt M6*8	2
11-3	0.04.04930	washer for gear	1
11-4	2.1.02.1160	flywheel 420-14	1
11-5	0.01.00500	bolt M6*32	2
11-6	7.6.0033	engine side cover	1
11-7	2.1.02.1320	oil level gauge	1
11-8	0.01.11350	bolt M6*20	2
11-9	2.8.02.0021	intake pipeXS60	1
11-10	7.6.9004	rubber washer for intake pip	1
11-11	380070080-0005	bolt M6*25	2

Estelar

5 ELECTRICALS (2/2)

<< BACK

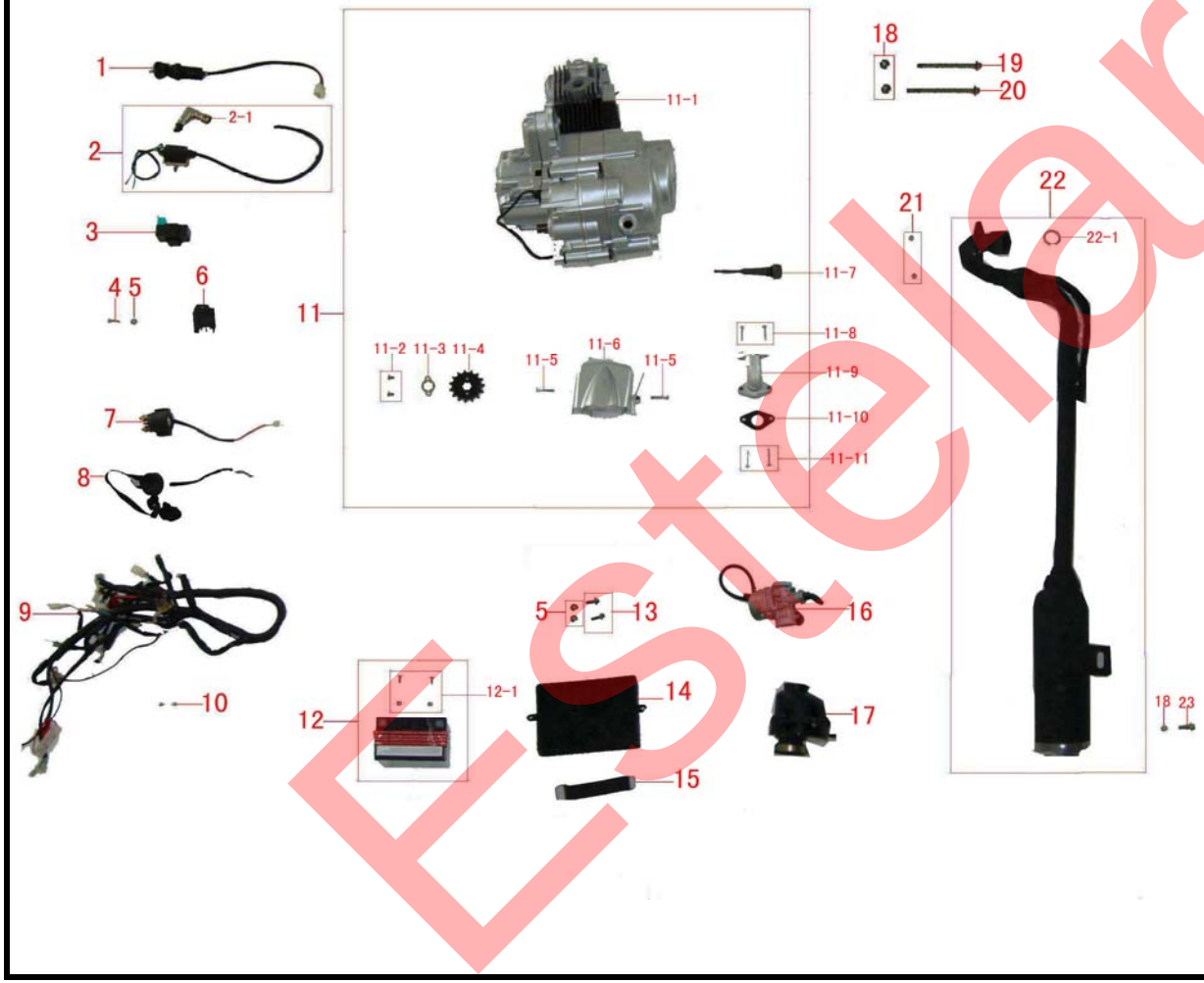

序号 S.N	零部件代号 Part NO.	英文名称 English part Name	数量 Quantity
12	5.3.03.0040	battery	1
12-1	7.6.9003	bolt for the battery	1 set（2pcs）
13	0.01.00420	bolt M6*16	1
14	6.2.06.0060	battery cover	1
15	6.2.07.0060	belt for battery	1
16	2.8.03.0011	carburetor PZ19L-12	1
17	2.5.03.1000	airfilter	1
18	0.03.00120	Nut M8	3
19	0.01.15520	Bolt M8*105	1
20	0.01.05920	Bolt M8*105	1
21	0.03.02350	Nut M6	4
22	2.4.06.0012	muffler	4
22-1	2.4.03.002	seal	1
23	0.01.05120	Bolt M8*16	1

Estelar

6 STEERING

<< BACK

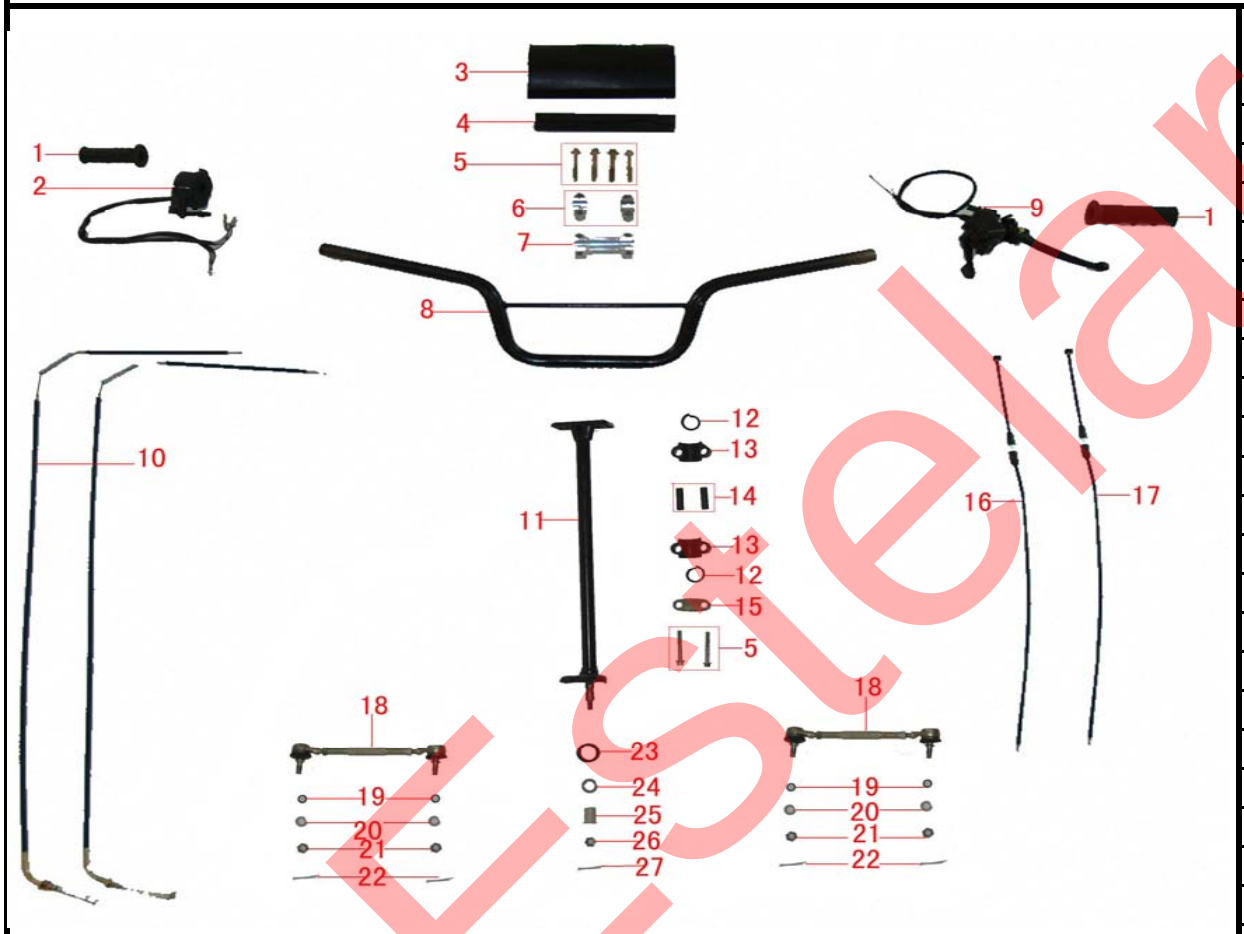

序号 S.N	零部件代号 Part NO.	英文名称 English part Name	数量 Quantity
1	4.4.02.0030	handle cover(L/R) (black)	2
2	5.3.03.0010	Function buttion	1
3	7.5.02.0010	Foam cover	1
4	7.5.02.1750	Foam	1
5	0.01.04720	Bolt M8*55	6
6	4.4.01.0030	Up blockr for handlebar	2
7	4.4.01.0050	Down block for handlebar	1
8	4.4.06.0011	Handble bar	1
9	4.3.02.0120	brake lever	1
10	4.5.02.0034	front brake cable	2
11	1.2.06.0011	steering assy	1
12	1.2.02.0050	dustproof seal	2
13	1.2.02.0020	clipper for steering pole	2
14	1.2.02.0040	sleeve for clipper	2
15	1.2.06.0020	fixing panel for steering pole	2
16	4.5.02.0020	choke cable	1
17	4.5.02.0010	throttle cable	1
18	3.1.03.0030	tie rod	2
19	0.04.00810	spring washer 10	4
20	0.04.00450	washer 10	4
21	0.03.01820	slotted nut M10	4
22	0.08.02100	cotter pin 2.5*30	4
23	1.2.02.0070	dustproof cover for steering po	1
24	0.04.03050	washer14*28*2	1
25	1.2.02.0060	PU cover	1
26	0.03.01820	slotted nut M10*1.25	1
27	0.08.02100	cotter pin 2.5*30	1

Estelar

<< BACK

E-1 气缸头/气缸体(CYLINDER HEAD/CYLINDER BODY)

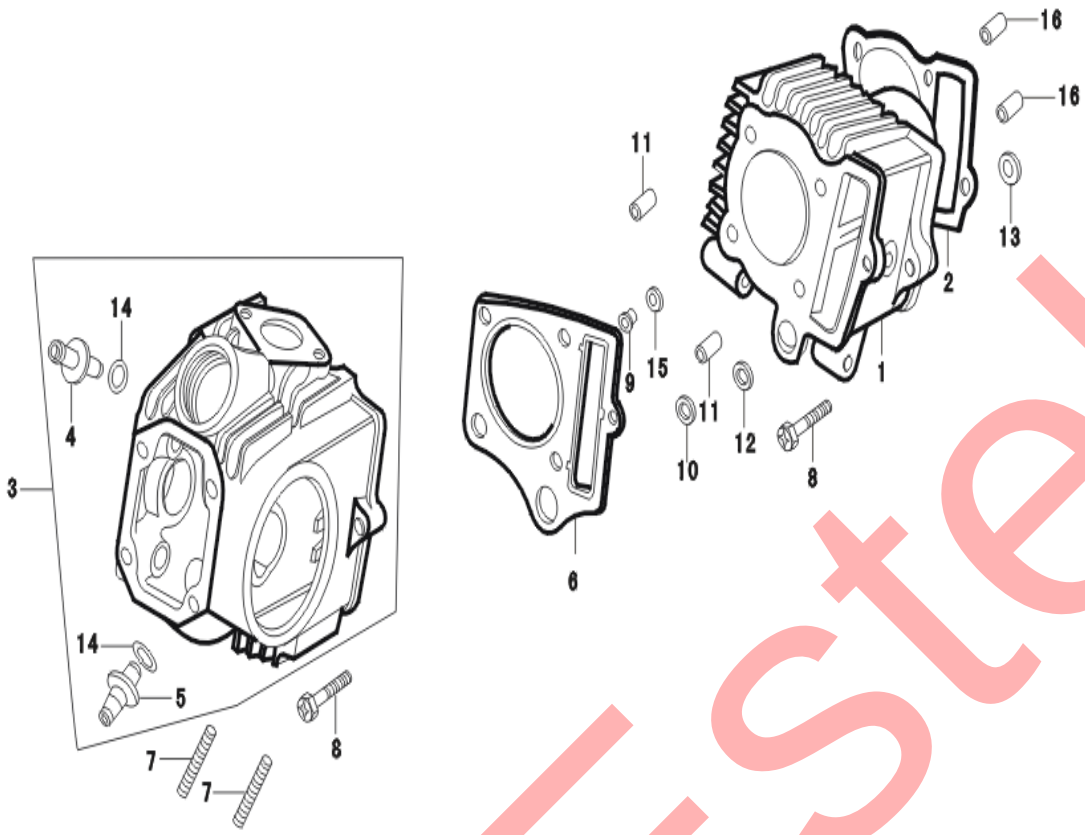

序号 S.N	零部件代号 Part .NO	英文名称 English Name	状态 Condition	数量Quantity
1	120020011-0001	CYLINDER ASSY.	铸铁竖纹 86cm3(cast iron erect veins)	1
2	120050005-0001	GASKET,CYLINDER	蓝天MT1;(LantianMT1)	1
3	120080057-0001	HEAD ASSY., CYLINDER		1
4		PIPE.IN VALVE	属于件3，不可单购（belongs to Part No.3,can't buy separately)	1
5		PIPE.EX VALVE	属于件3，不可单购（belongs to Part No.3,can't buy separately)	1
6	120150008-0001	GASKET,CYLINDER HEAD		1
7	380180031-0004	STUD	bm=2d_M6_L=20_10.9级	2
8	380040003-0004	BOLT	M6×23	2
9	380820090-0001	COLLAR	外径8_内径6.5_长10（external diameter8-internal diameter6.5-length10)	1
10	380820089-0001	WASHER	外径14.8_内径11.5_长1.8（external diameter14.8-	1
11	380600002-0001	PIN	8*14	2
12	380840045-0001	O-RING	D=14.5_外径18.5_d=2.4	1
13	380840046-0001	RECTANGULAR RING	11.5*15.7*2.4	1
14		O-RING	属于件3，不可单购（belongs to Part No.3,can't buy separately)	2
15	380840047-0001	RECTANGULAR RING	9*11.7*1.5	1
16	380600012-0001	CYLINDER ASSY.	8×12	2

Estelar

<< BACK

E-2 气缸头盖（COVER,CYLINDER HEAD ）

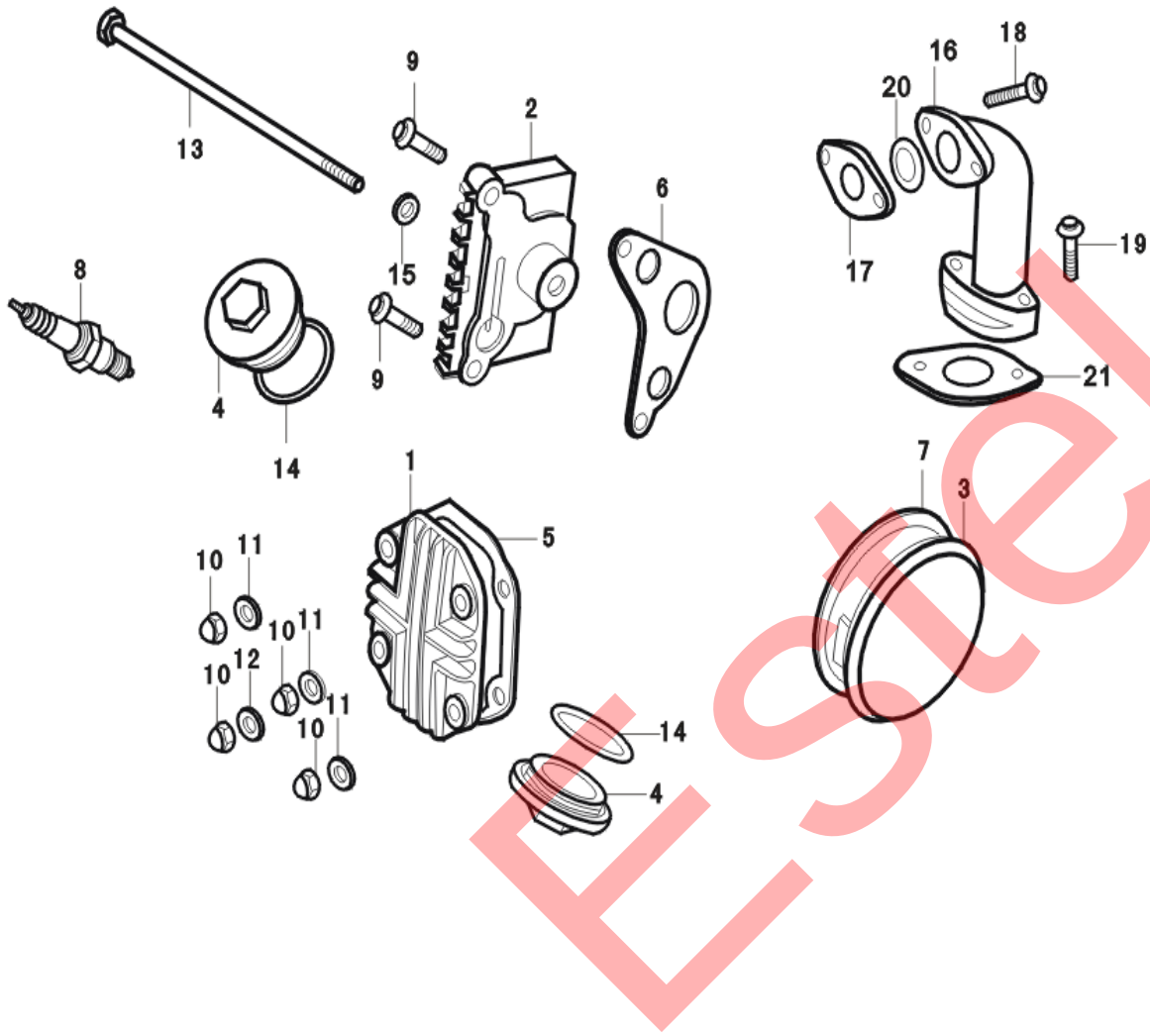

序号 S.N	零部件代号 P art.NO	英文名称 English Name	状态 Condition	数量Quantity
1	120230007-0001	COVER,CYLINDER HEAD		1
2	120350001-0001	COVER,R.CYLINDER HEAD SIDE		1
3	120300002-0002	COVER,L.CYLINDER HEAD SIDE		1
4	120280003-0001	VALVE CAP		2
5	120250001-0001	GASKET,CYLINDER HEAD COVER	蓝天MT1(LantianMT1)	1
6	120370001-0001	GASKET,R.CYLINDER HEAD SIDECOVER	蓝天MT1(LantianMT1)	1
7	120310001-0001	GASKET,L.CYLINDER HEAD SIDE COVER	蓝天MT1(LantianMT1)	1
8	270960004-0001	SPARK PLUG	A7RTC_无干扰；(no interference)	1
9	380140015-0006	BOLT	M6×20	2
10	380330011-0004	NUT，CYLINDER HEAD COVER	M6_H=12;镀蓝白锌Q16（blue,white zinc plated)	4
11	380540017-0001	GASKET	铝垫圈6*13*2（aluminum washer）	3
12	380450053-0001	GASKET	铜垫圈6*13*2（copper washer）	1
13	380140066-0005	BOLT M6×110	M6*110，盘径13mm	1
14	380840132-0001	O-RING	氟橡胶VITON 3.2*30.8(fluorin rubber)	2
15	380450048-0001	GASKET	铝垫圈内径6_外径12_厚度1.2(aluminum washer，internal diameter6-external12-thickness1.2）	1
16	180420114-0001	IN VALVE		1
17	170440003-0001	INSULATOR CABURETTOR		1
18	380070014-0006	BOLT,HEXAGONAL WITH FLANGE	GB/T5783-M6*25镀兰白锌（blue，white zinc plated）	2
19	380070080-0005	BOLT,HEXAGONAL WITH FLANGE	GB/T5783-M6*28镀兰白锌（blue，white zinc plated）	2
20	380840274-0001	SEAL	氟橡胶VITON 2.4*25(fluorin rubber)	1
21	170430004-0001	GASKET，CARBURETTOR	φ22，蓝天MT1(LantianMT1)	1

Estelar

<< BACK

E-3 气门组件（CAMSHAFT/VALVE）

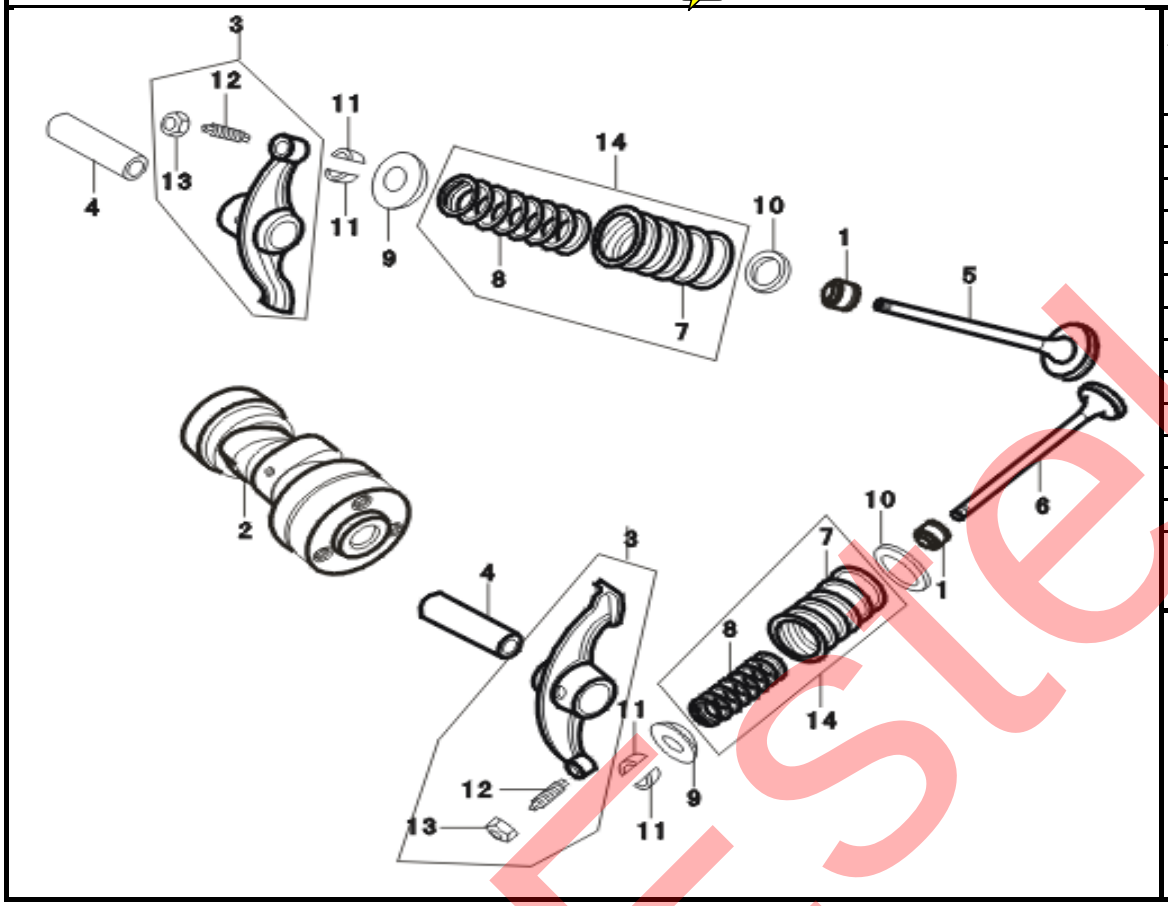

序号 S.N	零部件代号 Part.NO	英文名称 English Name	状态 Condition	数量Quantity
1	140400002-0001	OIL SEAL,VALVE	氟橡胶(fluorin rubber)	2
2	140020002-0001	CAMSHAFT COMP		1
3	140450003-0001	ARM,VALVE ROCKER		2
4	140510002-0001	SHAFT，VALVE ROCKER ARM		2
5	140300003-0001	VALVE,IN.		1
6	140310003-0001	VALVE,EX.		1
7	140350002-0001	SPRING,VALVE OUTER		2
8	140340002-0001	SPRING,VALVE INNER		2
9	140380002-0001	RETAINER, VALVE INNER SPRING		2
10	140370002-0001	SEAT,VALVE OUTER SPRING		2
11	140390002-0001	COTTER,VALVE		4
12	140480002-0001	SCREW,TAPPET ADJUSTING		2
13	140490003-0001	NUT,TAPPET ADJUSTING		2
14	140330002-0001	SPRING VALVE，ASSY	含气门内、外弹簧各1件（including outer and inner spring of valve）	2

Estelar

<< BACK

E-4 右曲轴箱盖（RIGHT CRANKCASE COVER）

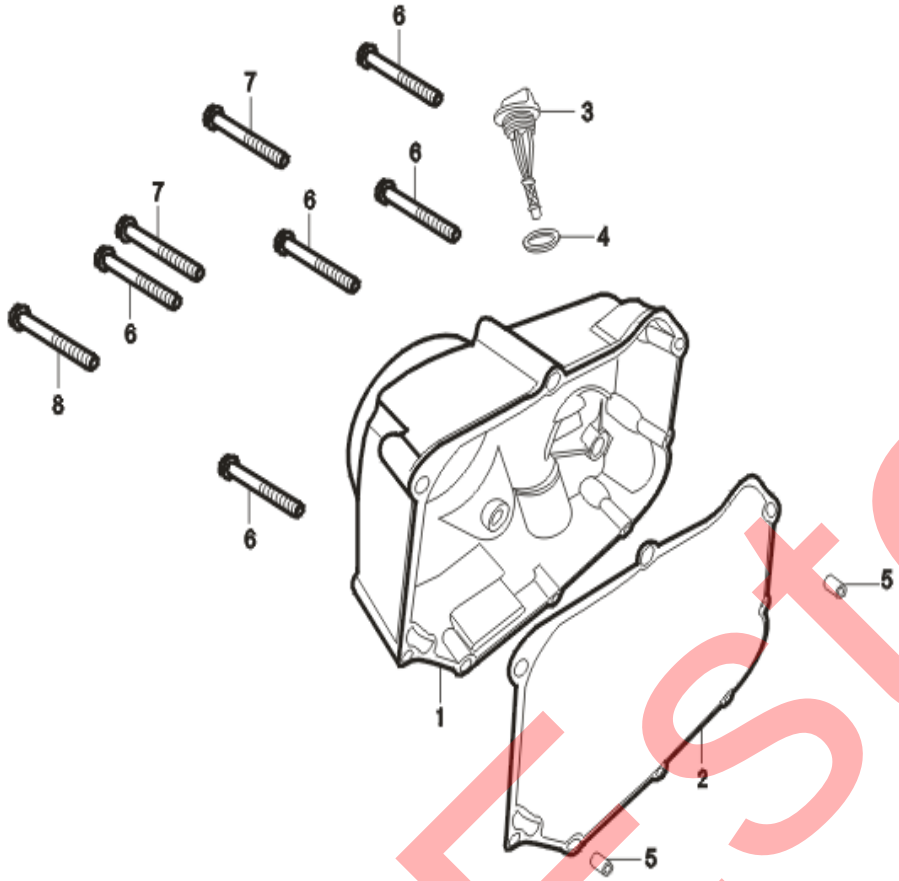

序号 S.N	零部件代号 Part.NO	名称 Name	状态 Condition	数量Quantity
1	110600099-0001	右曲轴箱盖	(90自)小右盖纯电 1#银白（silver white）	1
2	110620005-0001	右曲轴箱盖密封垫	蓝天MT1;(LantianMT1)	2
3	110700007-0004	机油尺	小右盖用（长62）本色（for small right cover(62 in length) original colour)	1
4	380840042-0001	密封圈	丁晴橡胶NBR 3.5*18（NBR）	1
5	380600012-0001	定位销	8*12	2
6	380140019-0006	六角头法兰面螺栓	M6*40镀兰白锌（blue，white zinc plated）	5
7	380140057-0005	六角头法兰面螺栓	M6*65镀兰白锌（blue，white zinc plated）	2
8	380140059-0005	六角头法兰面螺栓	GB/T16674.1-M6*80镀兰白锌（blue，white zinc plated）	1

Estelar

<< BACK

E-5 曲轴箱体/机油泵（CRANKCASE/OIL PUMP）

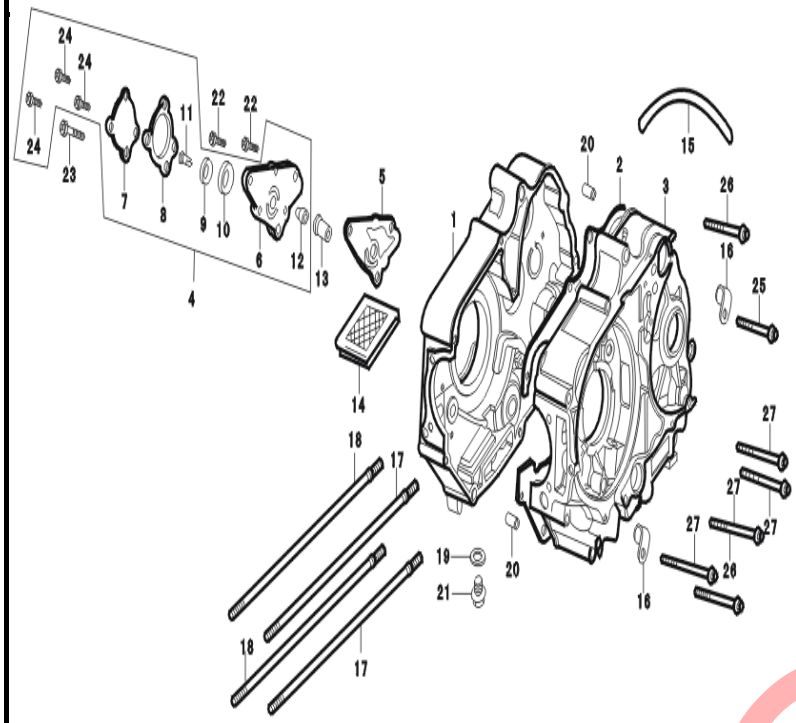

序号 S.N	零部件代号 Part.NO	英文名称 English Name	状态 Condition	数量Quantity
1	110080041-0001	CRANKCASE COMP.,R.		1
2	110100054-0001	GASKET,CRANKCASE	蓝天MT1;(LantianMT1)	1
3	110030062-0001	CRANKCASE COMP.,L.		1
4	150010006-0001	OIL PUMP ASSY.		1
5	150140001-0001	GASKET,OIL PUMP		1
6		BODY,OIL PUMP	属于件4，不可单购（belongs to Part No.4,can't buy separately)	1
7		COVER,OIL PUMP	属于件4，不可单购（belongs to Part No.4,can't buy separately)	1
8		GASKET,OIL PUMP COVER	属于件4，不可单购（belongs to Part No.4,can't buy separately)	1
9		ROTOR,OIL PUMP INNER	属于件4，不可单购（belongs to Part No.4,can't buy separately)	1
10		ROTOR,OIL PUMP OUTER	（belongs to Part No.4,can't buy separately)属于件4，不可单购	1
11		SPINDLE,OIL PUMP	属于件4，不可单购（belongs to Part No.4,can't buy separately)	1
12		SLEEVE,OIL PUMP	属于件4，不可单购（belongs to Part No.4,can't buy separately)	1
13	380820093-0001	BUSH,OIL PUMP SPROCKET SPINDLE	油泵链轮轴套;(sleeve for sprocket of oil	1
14	150290002-0001	SCREEN,OIL FILTER		1
15	380740022-0001	TUBE, BREATHER	弯φ7*11,长190（curveφ7*11,length190)	1
16	380950016-0001	CLAMP,BREATHER TUBE	Φ11;镀彩锌Q09（colour zinc plated)	2
17	110240002-0001	BOLT A,CYLINDER STUD	M6*202 A发黑（black)	2
18	110250002-0001	BOLT B,CYLINDER STUD	M6*194 B发黑（black)	2
19	380450018-0003	WASHER,DRAIN PLUG	铝垫圈12*20*2（aluminum washer）	1
20	380600001-0001	PIN,KNOCK	10*14	2
21	110260003-0006	BOLT,DRAIN PLUG	M12×1.5;镀白锌Q08(white zinc plated)	1
22	380200015-0001	SCREW	M6*16	2
23	380200021-0001	SCREW	M6*22	1
24		SCREW	属于件4，不可单购（belongs to Part No.4,can't buy separately)	3
25	380140020-0003	BOLT,FLANGE	M6*50镀兰白锌（blue，white zinc plated）	1
26	380140032-0005	BOLT,FLANGE	M6*60镀兰白锌（blue，white zinc plated）	2
27	380140057-0005	BOLT,FLANGE	M6*65镀兰白锌（blue，white zinc plated）	3

Estelar

<< BACK

E-6 离合器（CLUTCH）

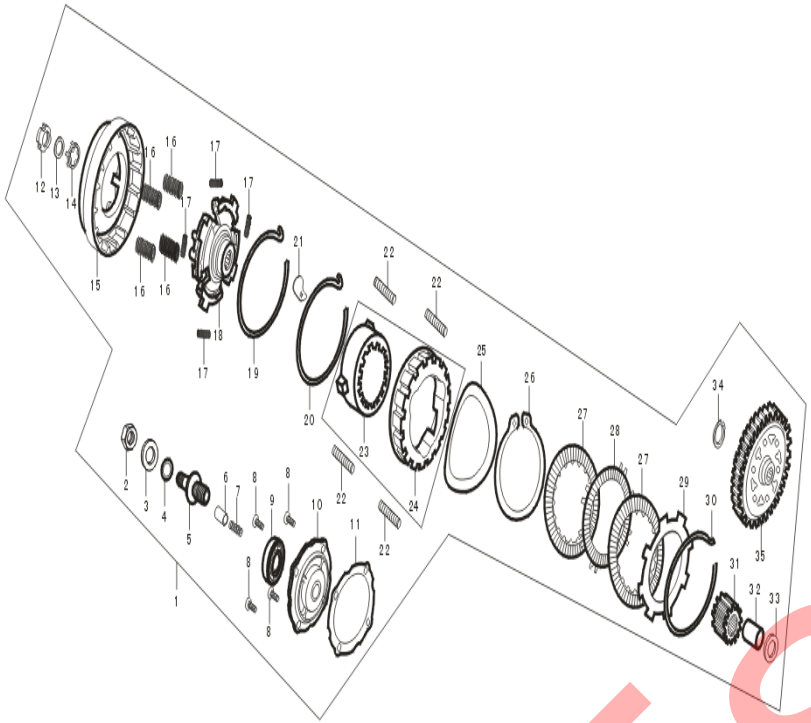

序号 S.N	零部件代号 Part.NO	英文名称 English Name	状态 Condition	数量Quantity
1	500280069-0001	CLUTCH ASSY	69齿_17齿	1
2	380340005-0005	NUT	GB/T6170-M8	1
3	380450153-0001	GASKET	8*14*2	1
4	380840064-0001	O-RING	丁晴橡胶NBR 1.8*7.5（NBR）	1
5	190890005-0001	VALVE，ADJUSTING	改进型，10*40白锌(improved, white zinc)	1
6	150520002-0001	PIPE,OIL IN		1
7	381150032-0001	SPRING,OIL IN		1
8	380220044-0002	BOLT	M5_L=12;镀蓝白锌（blue,white zinc plated)	4
9	380630024-0001	BEARING		1
10	193980002-0001	END COVER,CLUTCH		1
11	190310002-0001	GASKET,CLUTCH END COVER		1
12	380810006-0001	NUT	M14_牙距1	1
13	380480002-0001	WASHER,DISC	d=14_D=24_h=1.2	1
14	194090003-0001	WASHER	离合器紧固螺母垫圈(nut washer for clutch)	1
15	190330006-0001	OUTER COVER ASSY.,CLUTCH		1
16	190550004-0001	SPRING，CLUTCH		4
17	381150027-0001	DAMPER SPRING,CLUTCH		4
18	190580001-0001	DRIVING PLATE		1
19	190600001-0001	CIRCLIP		1
20	190610001-0002	CIRCLIP	不可单购（can't buy separately)	1
21	190590001-0001	BLOCK	不可单购（can't buy separately)	1
22	381150074-0001	SPRING	离合器分离弹簧(clutch separate spring)	4
23	190630001-0001	HUB ASSY，CLUTCH	不可单购（can't buy separately)	1
24	190640001-0001	BOSS，CLUTCH	定心滑套（pin bush)	1
25	380510009-0001	WASHER	不可单购（can't buy separately)	1
26	380550058-0001	SPRING，COLLAR	不可单购（can't buy separately)	1
27	190460003-0001	DISK，CLUTCH FRICTION		2
28	190430003-0001	PLATE，CLUTCH LOWER		1
29	190670002-0001	PLATE，CLUTCH UPPER		2
30	380550017-0001	CIRCLIP		1
31	190030019-0001	GEAR，PRIMARY DRIVE		1
32	380820077-0001	BUSH		1
33	380820071-0001	WASHER	不可单购（can't buy separately)	1
34	380570004-0001	CIRCLIP	初级从动齿(primary driven gear)	1
35	190360016-0002	PRIMARY DRIVEN GEAR COMP		1

Estelar

<< BACK

E-7 磁电机/左曲轴箱盖（GENERATOR/LEFT CRANKCASE COVER）

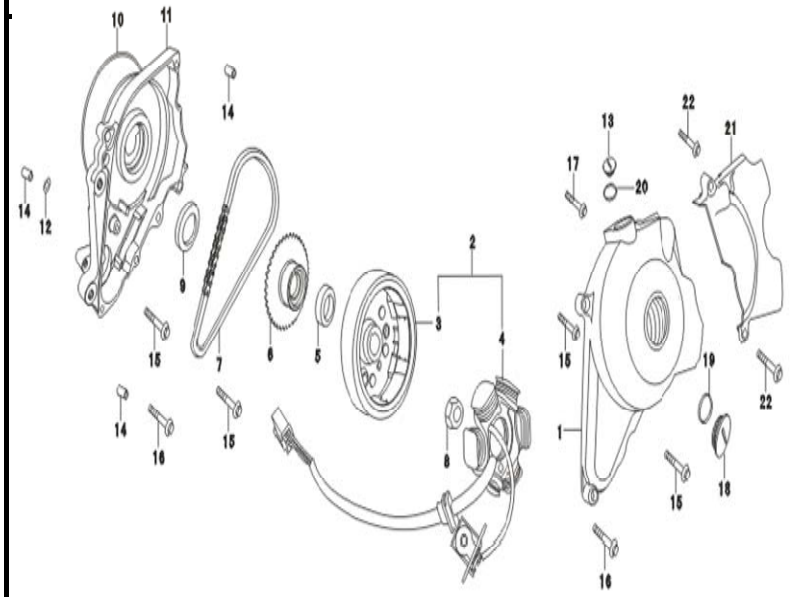

序号 S.N	零部件代号 Part .NO	英文名称 English Name	状态 Condition	数量Quantity
1	110400042-0004	COVER, L. CRANKCASE	小乖乖_6极	1
2	270010028-0021	GENERATOR	不可购组件，可单购3，4(buy Part No.3,4 only)	1
3	270020034-0001	FLYWHEEL COMP	六极矮_极靴式;带本体	1
4	270100039-0028	STATOR COMP.	六极_12V全波（6pole-12V full wave)	1
5	380650056-0001	OIL SEAL		1
6	193170006-0001	SPROCKET COMP, STARTING	70D小乖乖（Xiaoguaiguai）	1
7	193270001-0001	CHAIN, STARTING	62节	1
8	380370011-0001	NUT	M10×1.25_磁电机螺母;（generator nut)	1
9	380650054-0001	OIL SEAL	30*42*4.5CII	1
10	380840055-0001	O-RING	107*2CII	1
11	110310002-0003	DISK COVER		1
12	380840064-0001	O-RING	丁晴橡胶NBR 1.8*7.5（NBR）	1
13	110440001-0007	SMALL CAP EYEHOLE		1
14	380600012-0001	PIN, KNOCK	8*12	3
15	380140017-0005	BOLT	M6_L=28;镀蓝白锌Q16（blue, white zinc plated)	4
16	380140020-0003	BOLT	M6_L=50;镀蓝白锌Q16（blue, white zinc plated)	1
17	380140169-0002	BOLT		2
18	110430001-0006	BIG CAP EYEHOLE		1
19	380840005-0001	O-RING	D=27.4_d=2.4	1
20	380840026-0001	O-RING	丁晴橡胶NBR 2.5*13.8（NBR）	1
21	110520103-0001	BACK. L. COVER	小乖乖-13#;1#银白W01（silver white）	1
22	380140017-0005	BOLT	GB/T16674.1-M6*28镀兰白锌（blue, white zinc plated)	2

Estelar

<< BACK

E-8 活塞/曲轴（PISTON/CRANKSHAFT COMP）

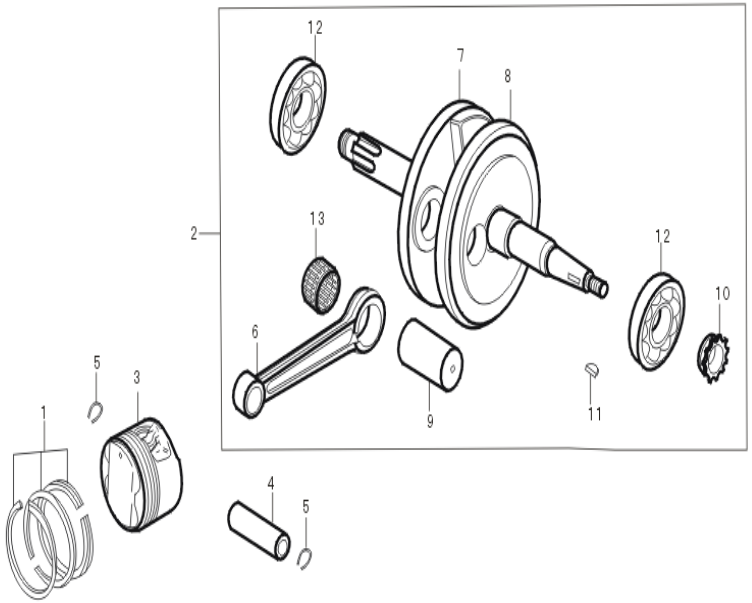

序号 S.N	零部件代号 Part.NO	英文名称 English Name	状态 Condition	数量Quantity
1	130070010-0001	PISTON RING SET	一环、二环、刮片环镀铬(chromeplated doctor blade)	1
2	130140004-0001	CRANKSHAFT COMP.	90，基本品质曲轴(basic quality for crankshaft)	1
3	130030007-0001	PISTON		1
4	130060003-0001	PIN,PISTON		1
5	380560006-0001	CLIP,PISTON PIN	活塞销挡圈;氧化Q07(pin piston circle;oxidation)	2
6	130150005-0001	ROD,CONNECTING	属于件2，不可单购（belongs to Part No.2,can't buy separately)	1
7	130260005-0001	CRANKSHAFT COMP.,R.		1
8	130210005-0001	CRANKSHAFT COMP.,L.		1
9	130350003-0001	PIN,CRANK		1
10	130230002-0001	SPROCKET,TIMING		1
11	380620002-0001	KEY,WOODRUFF		1
12	380630022-0001	BEARING 6304	属于件2，不可单购（belongs to Part No.2,can't buy separately)	2
13	380630023-0002	NEEDLE BEARING	属于件2，不可单购（belongs to Part No.2,can't buy separately)	1

Estelar

<< BACK

E-9 主轴\副轴(MAINSHAFT\COUNTERSHAFT ASSY)

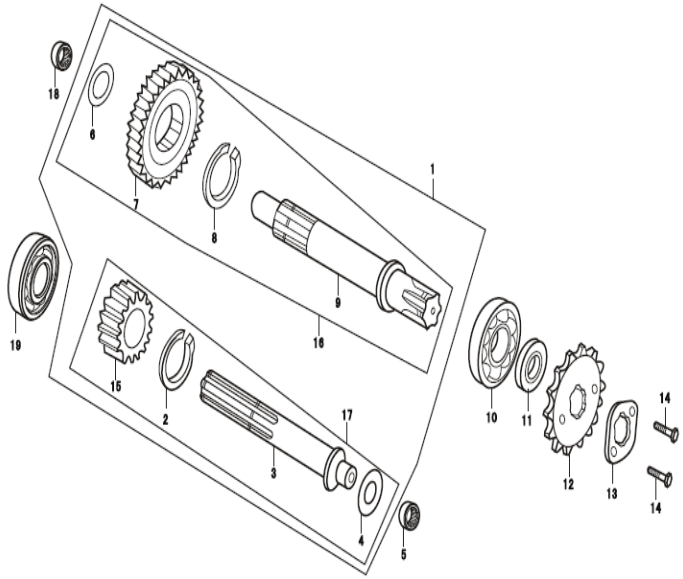

序号 S.N	零部件代号 Part.NO	英文名称 English Name	状态 Condition	数量Quantity
1	500290026-0001	TRANSMISSION ASSY	单极传动(纯电专用);(monopole transmission)	1
2	380550018-0001	CIRCLIP	d=17_S=1.2	1
3	191260030-0001	MAINSHAFT	属于件17，不可单购（belongs to Part No.17,can't buy separately)	1
4	380540018-0001	GASKET	轴径14_外径26_厚度0.5(shaft diameter14-external diameter26-thickness0.5)	1
5	380630020-0001	BEARING	HK14*20*12	1
6	380540018-0001	GASKET	轴径14_外径26_厚度0.5(shaft diameter14-external diameter26-thickness0.5)	1
7	191420026-0001	DRIVING GEAR,1ST COUNTERSHAFT	属于件1，不可单购（belongs to Part No.1,can't buy separately)	1
8	380550018-0001	CIRCLIP	d=17_S=1.2	1
9	191400046-0001	COUNTERSHAFT	属于件1，不可单购（belongs to Part No.1,can't buy separately)	1
10	380630002-0001	BEARING		1
11	380650061-0001	OIL SEAL	d=17_D=29_b=5	1
12	191600016-0001	SPROCKET,DRIVE	428-13齿 带凹;氧化(oxidation)	1
13	191610002-0001	PLATE,FIXING	普通镀彩锌（ordinary colour zinc plated)	1
14	380070004-0001	BOLT	M6_L=8;镀彩锌Q09（colour zinc plated)	2
15	191270003-0001	DRIVING GEAR,1ST MAINSHAFT	属于件17，不可单购（belongs to Part No.17,can't buy separately)	1
16	191390043-0001	COUNTERSHAFT ASSY	属于件1，不可单购（belongs to Part No.1,can't buy separately)	1
17	191250014-0001	MAINSHAFT ASSY		1
18	380630019-0001	BEARING	滚针轴承NK13.5*22*12（bearing）	1
19	380630002-0001	BEARING		1

Estelar

<< BACK

E-10 链条张紧器（CAM CHAIN/TENSIONER）

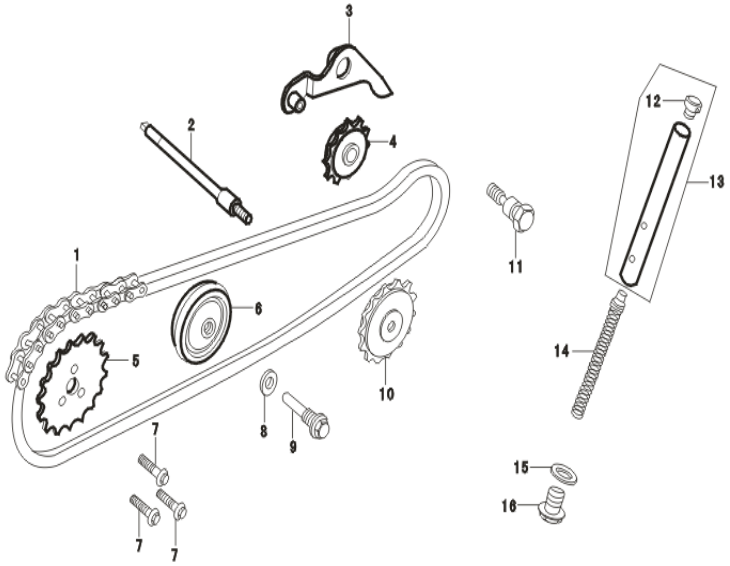

序号 S.N	零部件代号 Part.NO	英文名称 English Name	状态 Condition	数量Quantity
1	140610001-0001	CHAIN,CAM	84_滚子链;基本品质(roller chain:basic quality)	1
2	150130001-0001	SPINDLE,CAM CHAIN GUIDE SPROCKET	氧化Q07(oxidation)	1
3	141160001-0001	ARM COMP.,CAM CHAIN TENSIONER		1
4	141210001-0001	ROLLER,CAM CHAIN TENSIONER		1
5	140580002-0001	SPROCKET,CAM	链轮_28齿(sprocket-28teeth)	1
6	141240001-0001	ROLLER COMP.,CAM CHAIN GUIDE		1
7	140590001-0002	BOLT,KNOCK	M5×12	3
8	380450056-0001	WASHER,8MM		1
9	141270001-0005	PIN, CAM CHAIN GUIDE ROLLER	镀蓝白锌 Q16（blue,white zinc plated)	1
10	150150001-0001	SPROCKET,OIL PUMP	链轮;;sprocket	1
11	141200001-0001	PIVOT,CAM CHAIN TENSIONER	发黑（black)	1
12		HEAD,CAM CHAIN TENSIONER PUSH ROD	属于件13，不可单购（belongs to Part No.13,can't buy separately)	1
13	141080001-0001	ROD COMP.,CAM CHAIN TENSIONER PUSH	带头	1
14	381150030-0001	SPRING,CAM CHAIN TENSIONER	张紧杆弹簧SPRING,CAM CHAIN TENSIONER	1
15	380450054-0001	WASHER,SEALING	内径14.2外径20厚度1.5（external diameter20-internal diameter14.2-thickness1.5)	1
16	110260004-0004	BOLT,SEALING	M14×1.5;镀蓝白锌 Q16（blue,white zinc plated)	1

Esteler

<< BACK

E-11 起动装置（KICK STARTER SPINDLE）

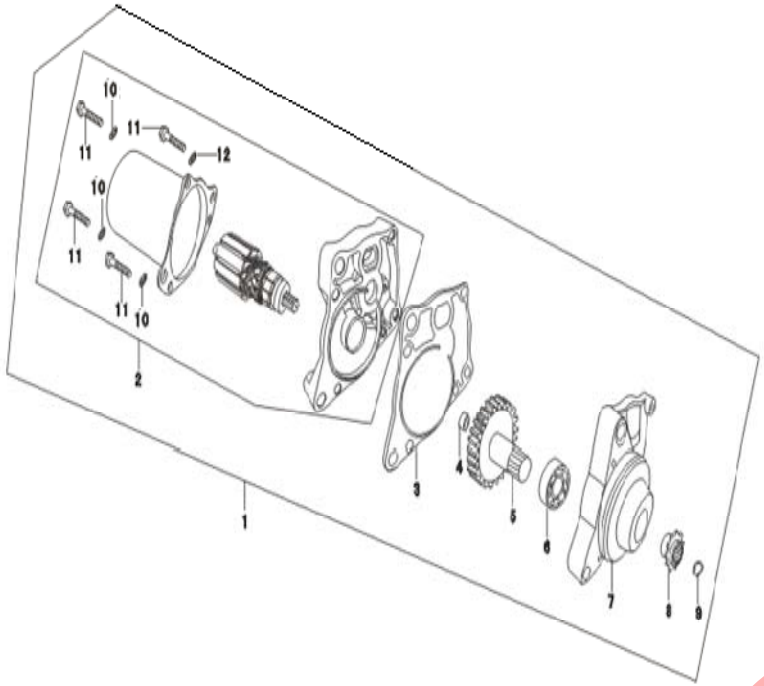

序号 S.N	零部件代号 Part.NO	英文名称 English Name	状态 Condition	数量Quantity
1	270350005-0009	MOTOR ASSY.,STARTER	小乖乖;800	1
2		MOTOR, STARTER	属于件1，不可单购（belongs to Part No.1,can't buy separately）	1
3		CUSHION	属于件1，不可单购（belongs to Part No.1,can't buy separately）	1
4		GASKET	属于件1，不可单购（belongs to Part No.1,can't buy separately）	1
5		GEAR	（belongs to Part No.1,can't buy separately)属于件1，不可单购	1
6		BEARING	属于件1，不可单购（belongs to Part No.1,can't buy separately）	1
7		END CAP	属于件1，不可单购（belongs to Part No.1,can't buy separately）	1
8		DRIVING CHAIN WHEEL	属于件1，不可单购（belongs to Part No.1,can't buy separately）	1
9		CIRCLIP	属于件1，不可单购（belongs to Part No.1,can't buy separately）	1
10		WASHER	属于件1，不可单购（belongs to Part No.1,can't buy separately）	4
11		SCREW	属于件1，不可单购（belongs to Part No.1,can't buy separately）	4

Estelar