GOES 450 X

Part Catalogue Update 06/2007

Fischer

INDEX

<< BACK

1	2	3
FIG 1 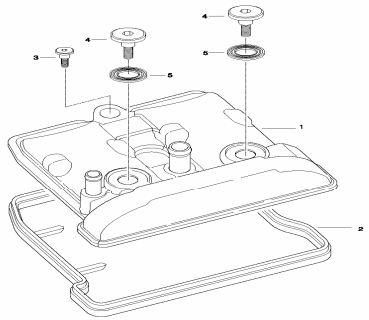	FIG 2 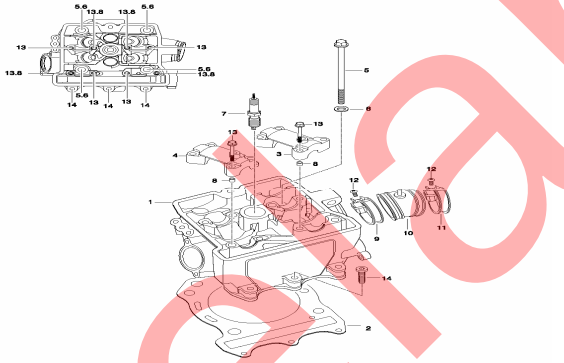	FIG. 3 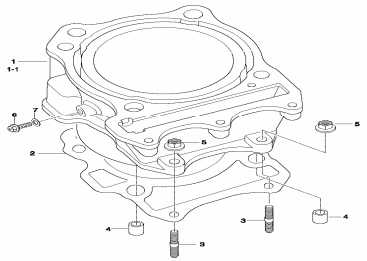
4	5	6
FIG 4 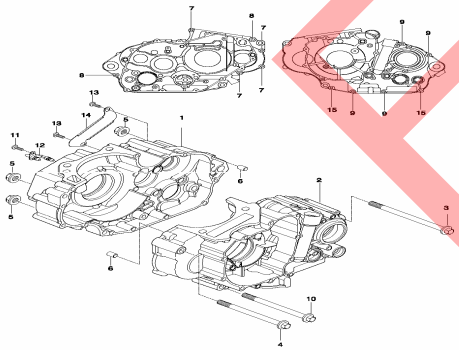	FIG 5 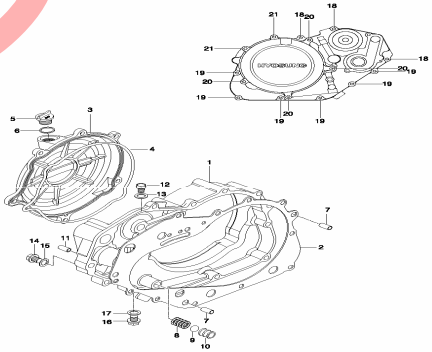	FIG 6 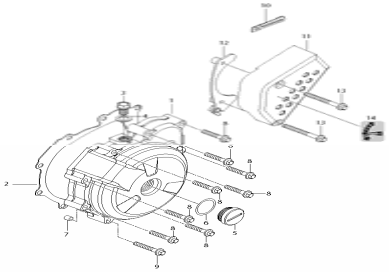

Estelar

7	8	9
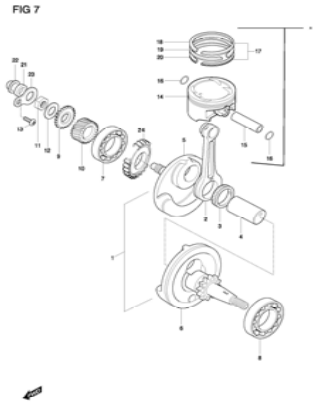	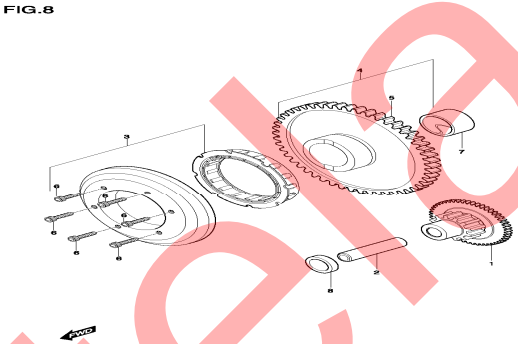	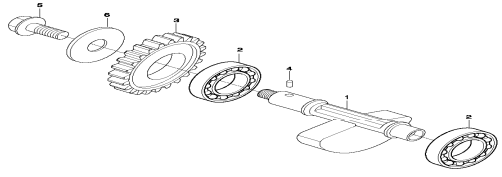

10	11	12
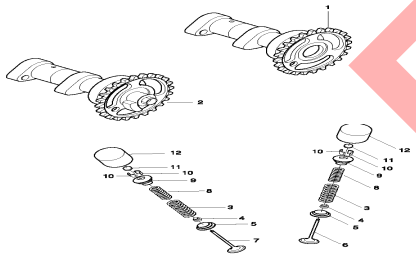	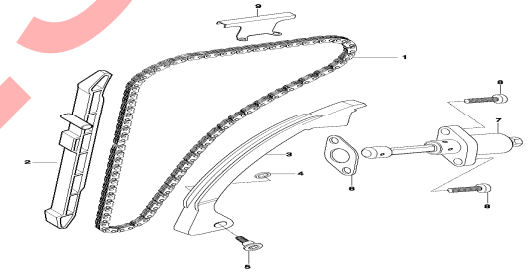	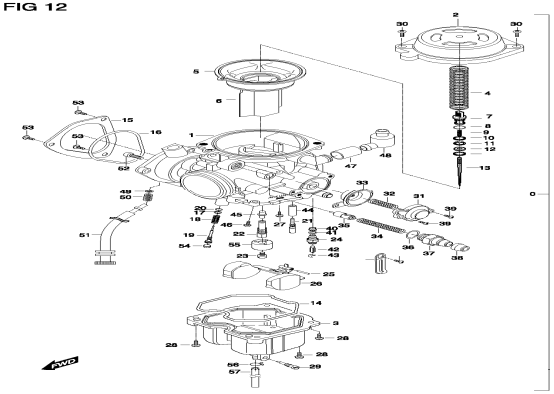

Esterar

INDEX

<< BACK

13	14	15
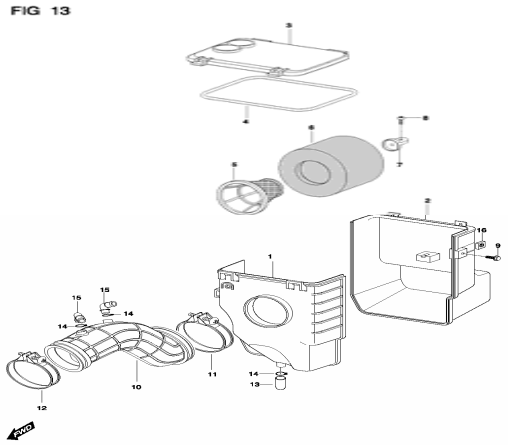	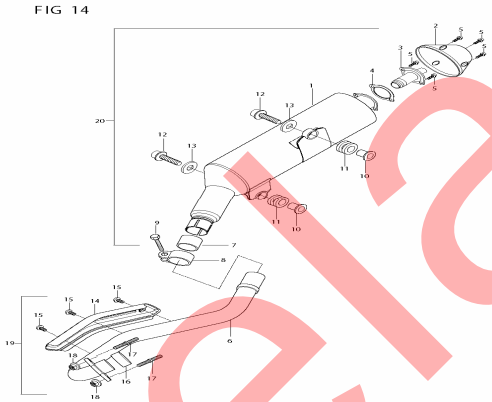	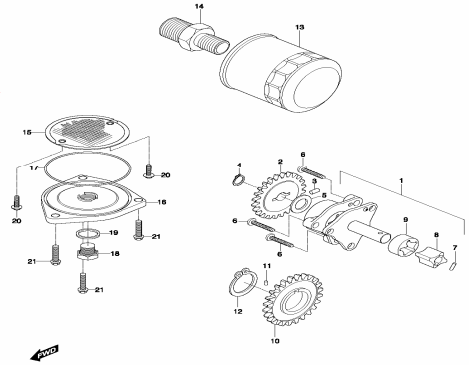

16	17	18
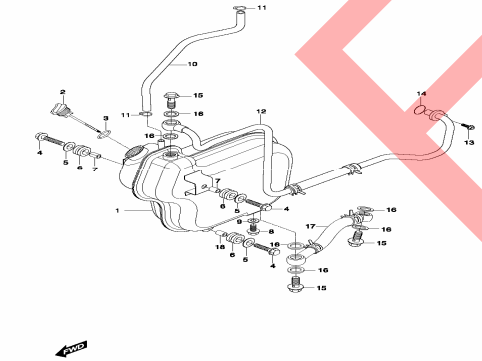	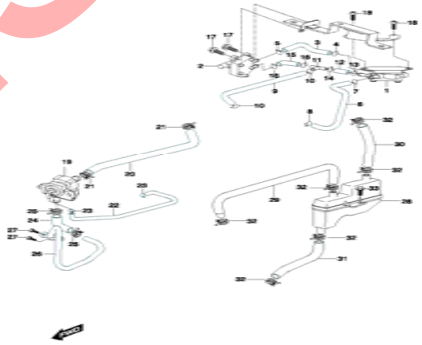	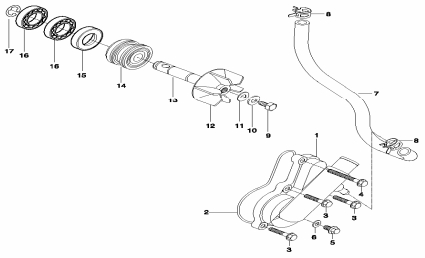

Estelar

INDEX

<< BACK

19	20	21
FIG 19 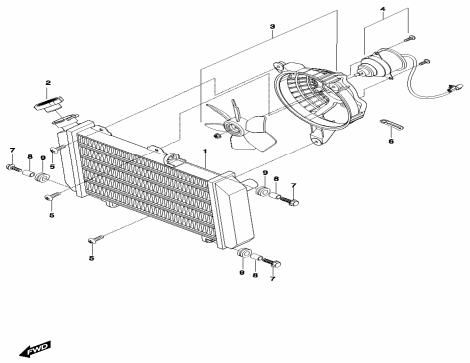	FIG.20 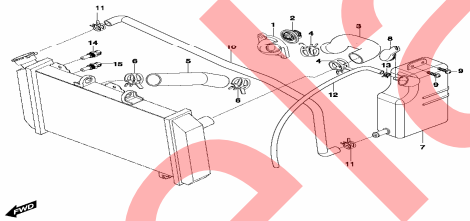	FIG 21 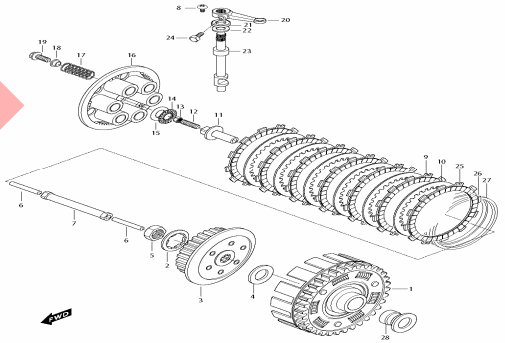
22	23	24
FIG.22 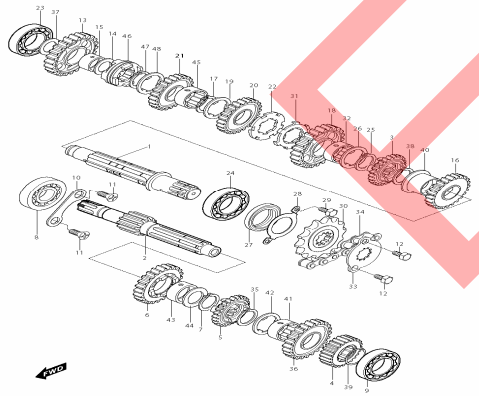	FIG 23 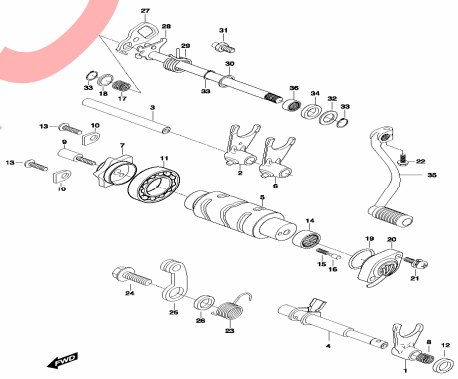	FIG 24 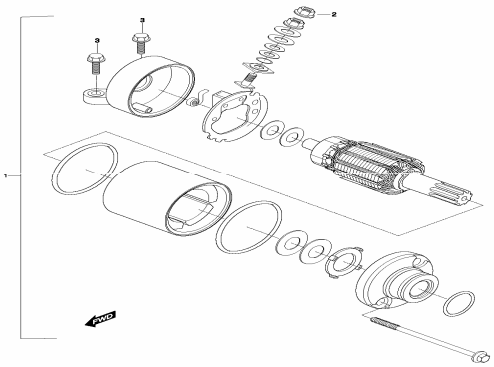

Esteral

INDEX

25	26	27
FIG 25 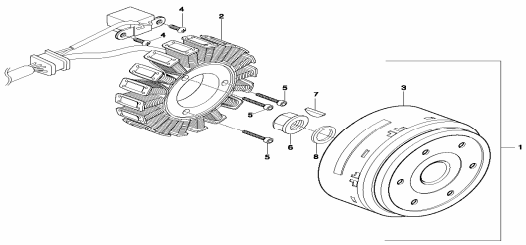	FIG 26 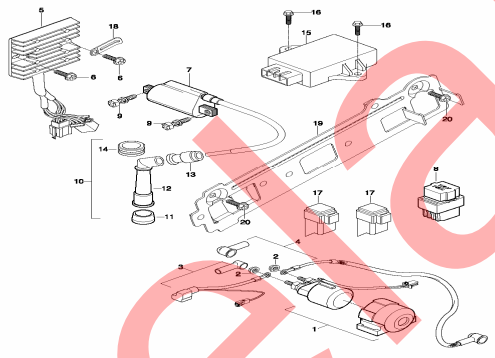	FIG 27 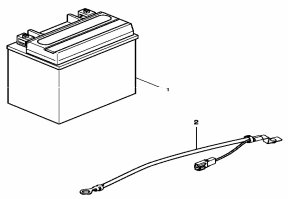

28	29	30
FIG.28 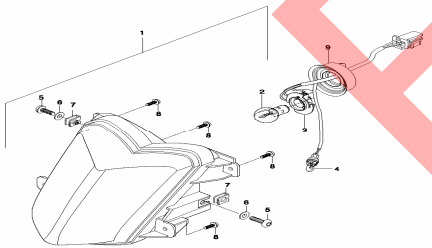	FIG 29 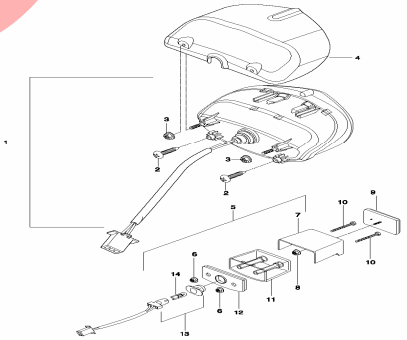	FIG.30 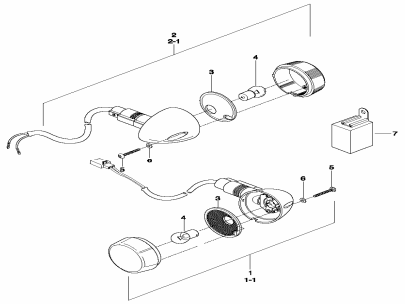

Estelar

INDEX

<< BACK

31	32	33
FIG 31 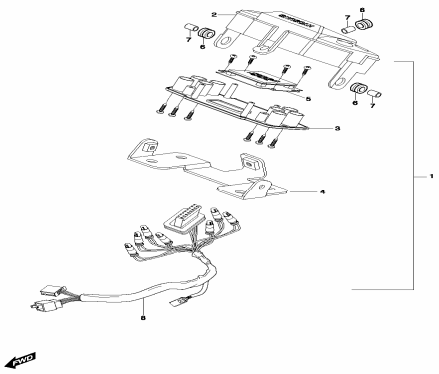	FIG.32 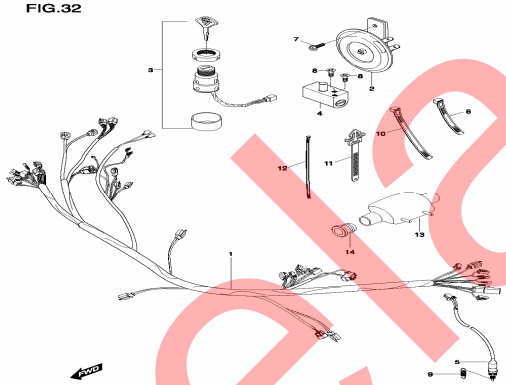	FIG 33 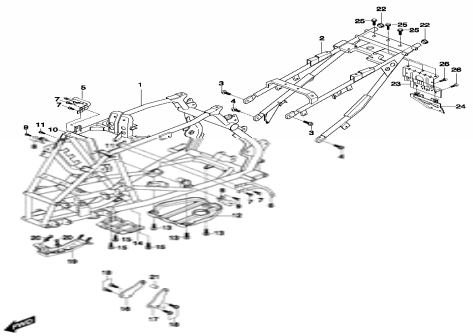

34	35	36
FIG 34 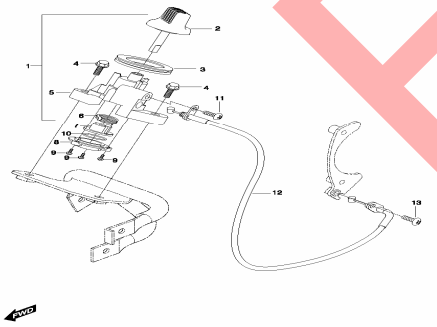	FIG 35 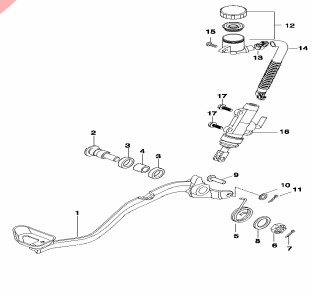	FIG 36 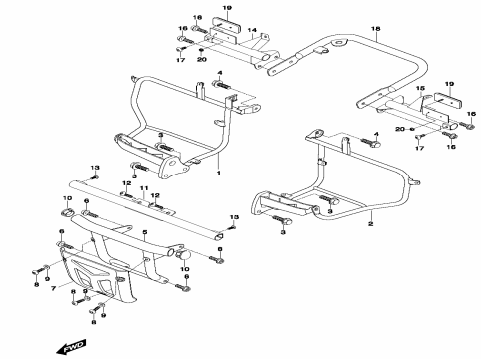

Estelar

INDEX

<< BACK

37	38	39
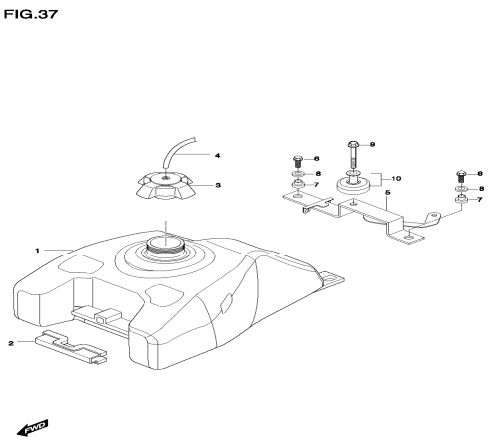	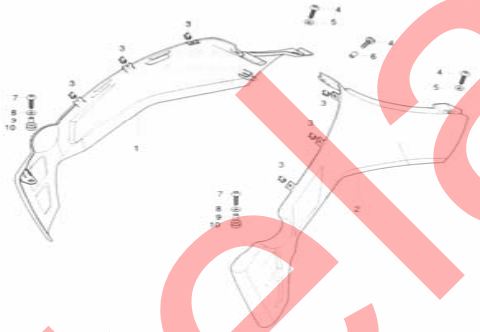	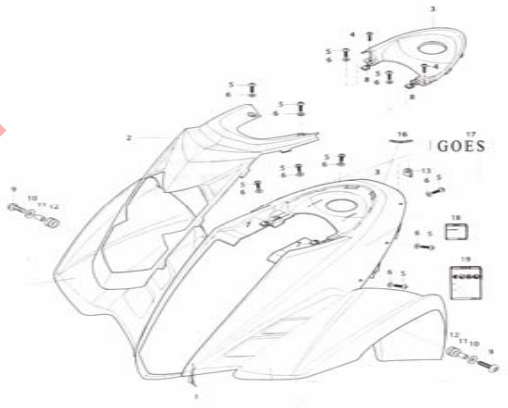

40	41	42
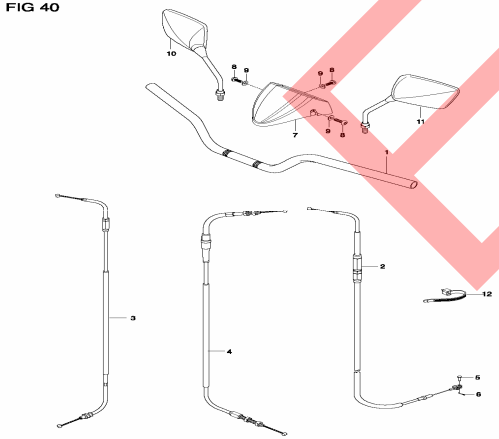	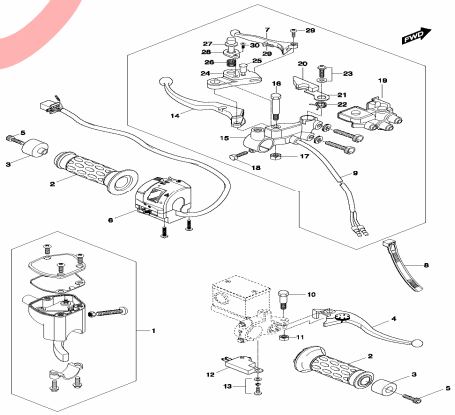	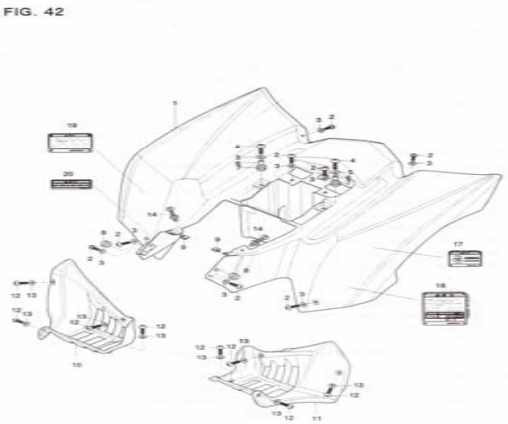

Estelar

INDEX

<< BACK

43	44	45
FIG. 43 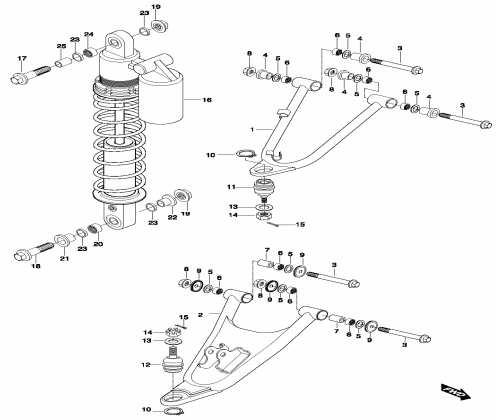	FIG 44 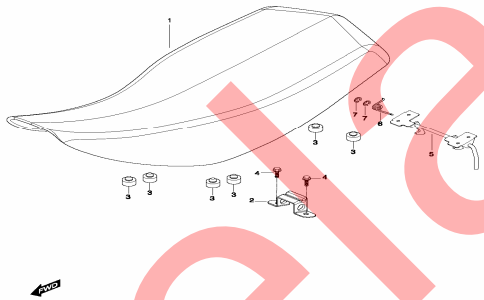	FIG. 45 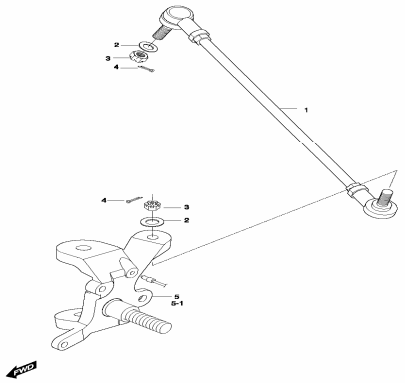

46	47	48
FIG. 46 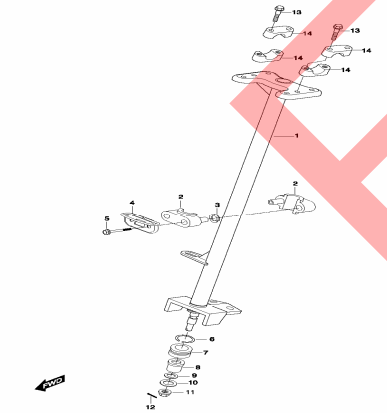	FIG. 47 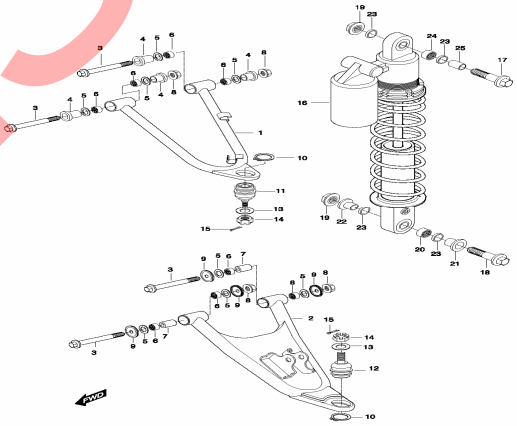	FIG. 48 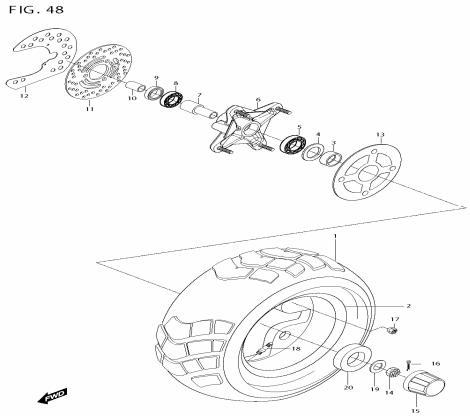

Estelar

INDEX

49	50	51
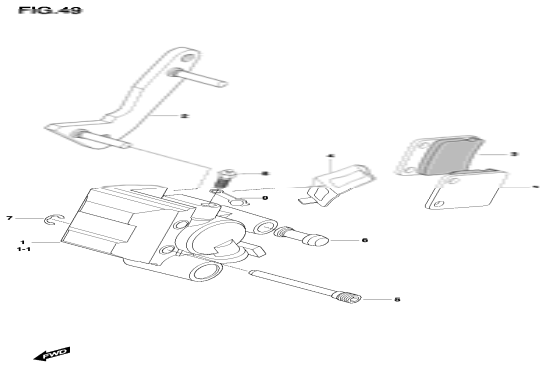		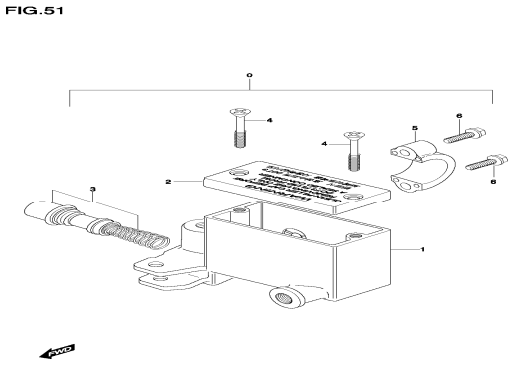

52	53	54
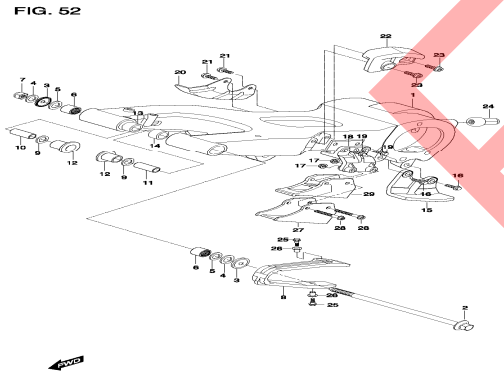	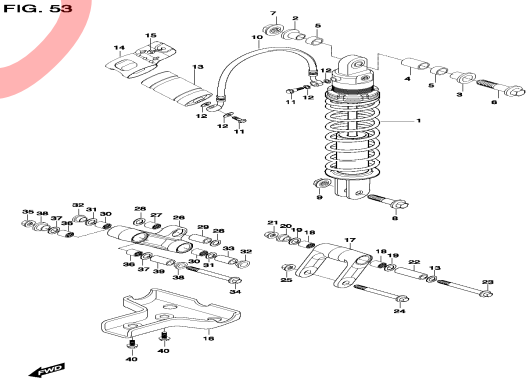	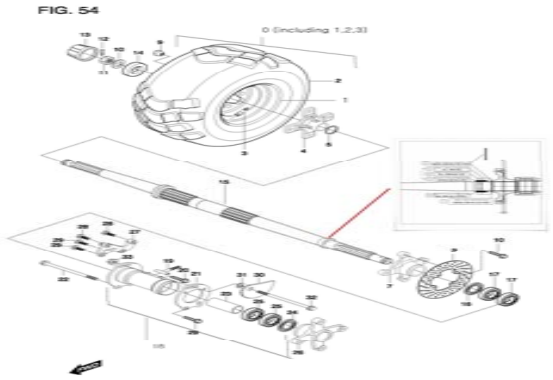

Estelar

INDEX

<< BACK

55	56	57
FIG. 55 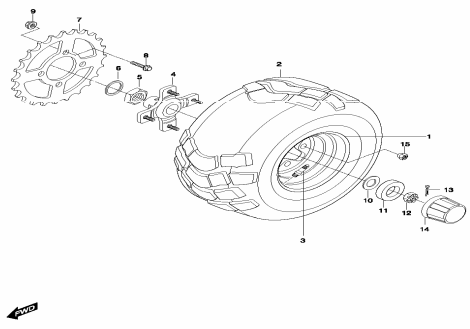	FIG.56 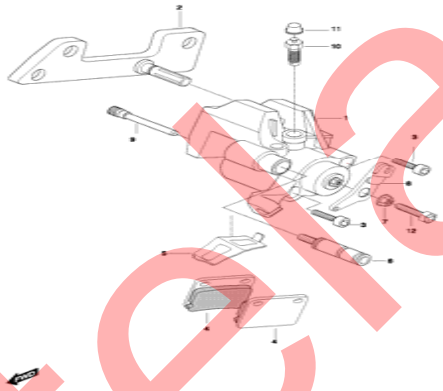	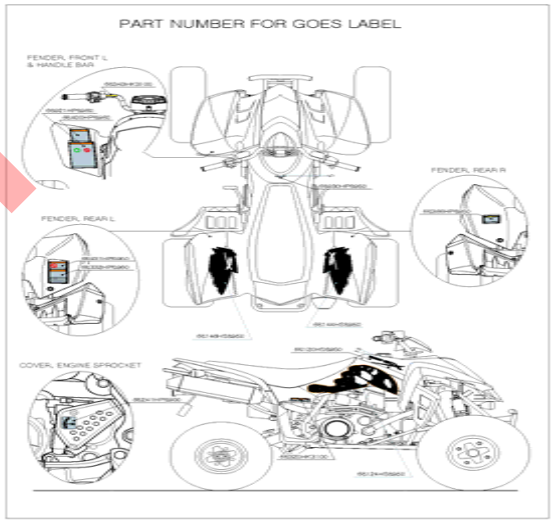

Esterar

1 CYLINDER COVER

FIG 1

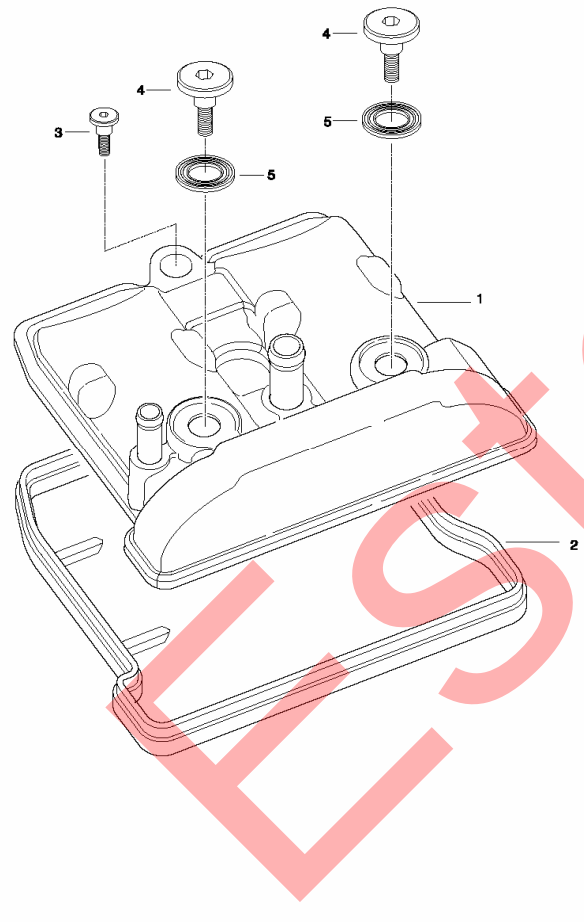

ITEM	P/N	DESCRIPTION	Q"TY
1	11171HP89000S1	COVER COMP, cylinder head	1
2	11173HP8900	GASKET, cylinder head cover	1
3	09106H07017	BOLT, cylinder head cover No.2	1
4	09106H07018	BOLT, cylinder head cover No.1	2
5	09161H11008	WASHER, cylinder head cover	2

Estela

2 CYLINDER HEAD

FIG 2

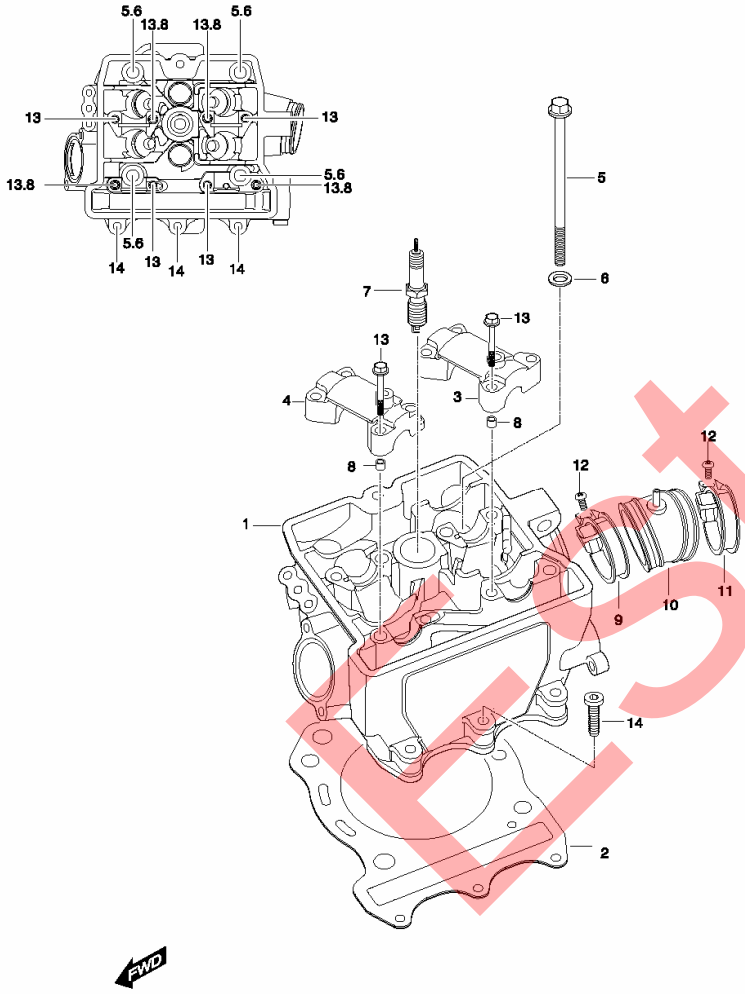

ITEM	DESCRIPTION	P/N	Q"TY
1	11110SP8900HPA	CYLINDER HEAD(plug +seal)	1
2	11141HP8900	GASKET, cylinder head	1
3	11131HP8900888	HOUSING ,camshaft intake	1
4	11132HP8900888	HOUSING ,camshaft exhaust	1
5	09103H10001	BOLT, cylinder head (M10)	4
6	09160H10002	WASHER, cylinder head bolt	4
7	09482-00456	PLUG, spark CR8E	1
8	09206-08001	KNOCK PIN, camshaft housing	4
9	09402-58208	CLAMP, carburetor	1
10	13110HP8900	PIPE COMP, intake	1
11	09402-58208	CLAMP, carburetor	1
12	02122-06168	SCREW, intake	2
13	09103H06002	BOLT, camshaft housing (M6)	6
14	07120-06408	BOLT, cylinder head No.1(M6)	3

Estelar

3 CYLINDER

FIG. 3

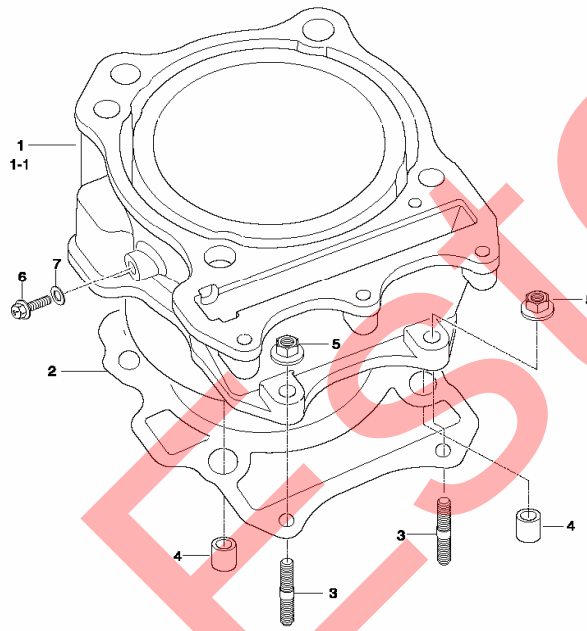

ITEM	DESCRIPTION	P/N	Q"TY
1	11210HP8900HPA	CYLINDER COMP(union+bolt+gaske	1
1-1	11210HP8920HPA	CYLINDER COMP(AL mono sleeve)	1
2	11241HP8900	GASKET, cylinder	1
3	01421-06258	BOLT, cylinder stud (M6)	2
4	04213-13189	PIN, cylinder knock	2
5	08316-16068	NUT, cylinder M6	2
6	01517-06128	BOLT, water drain	1
7	09168H06019	GASKET, water drain bolt	1

Estelar

4 CRANKCASE

FIG 4

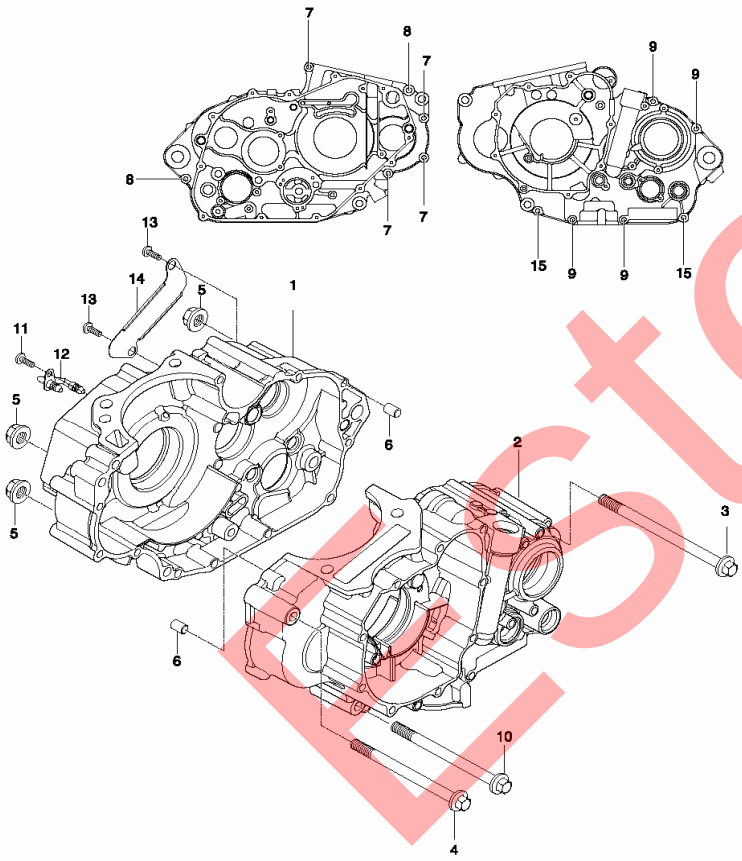

ITEM	DESCRIPTION	P/N	Q"TY
0	11300HP8900HPA	CRANKCASE ASS'Y	1
1	11310HP8900HPA	CRANKCASE COMP, R	1
2	11320HP8900HPA	CRANKCASE COMP, L	1
3	41999HP8900	BOLT, engine mounting lower rear	1
4	41996HP8900	BOLT, engine mounting front	1
5	08319-31108	NUT, engine mounting lower front	3
6	04213-13189	PIN, crankcase knock	2
7	01547-06758	BOLT, crankcase M6	4
8	07120-08508	BOLT, crankcase M8	2
9	01547-06858	BOLT, crankcase M6	4
10	07120-08208	BOLT, engine mounting front lower	4
11	02112-06128	SCREW, connecter oil pipe	1
12	24760HP8900	PIPE COMP, oil connecter	1
13	02112-06128	SCREW, oil return guide	2
14	11316HP8900	GUIDE, oil return	1
15	01547-06658	BOLT, crankcase M6	2

Estelar

<< BACK TO INDEX

FIG 5

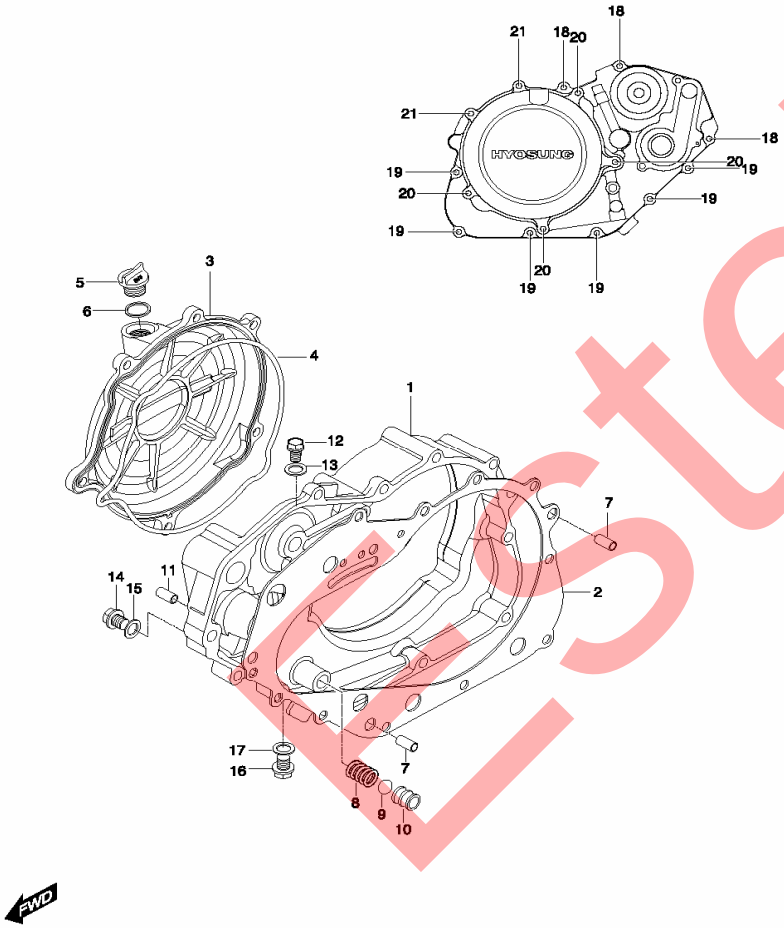

ITEM	DESCRIPTION	P/N	Q"TY
1	11330HP89000S1	COVER COMP, clutch	1
2	11481HP8900	GASKET, clutch cover	1
3	11341HP89000S1	COVER OUTER COMP, clutch	1
4	11482HP8900	O-RING, clutch outer cover	1
5	09259-2601503P	PLUG, eng oil filter	1
6	09280H17003	O-RING, eng oil filter plug	1
7	04213-13189	PIN, clutch cover knock	2
8	09440H08001	SPRING, oil check ball	1
9	06111-12004	BALL, oil check	1
10	16450HP8900	BUSH COMP, oil check	1
11	04222-03089	PIN, water pump case	1
12	01517-06128	BOLT, oil galley	1
13	09168H06019	GASKET, oil galley bolt	1
14	01514-08128	PLUG, oil check	1
15	09168-08015	GASKET, oil check plug	1
16	09247-100A9	BOLT, oil galley	1
17	09168H10003	GASKET, oil galley bolt	1
18	01547-06208	BOLT, clutch cover	3
19	01547-06308	BOLT, clutch cover	6
20	01547-06258	BOLT, clutch cover outer	4
21	01547-06708	BOLT, clutch cover outer	2

Estelar

6 MAGNETO COVER

<< BACK TO INDEX

FIG 6

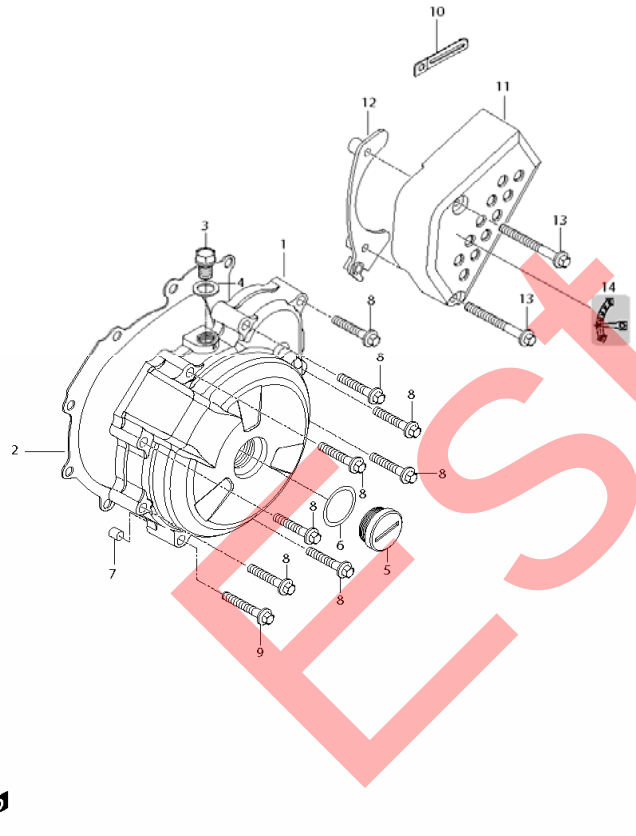

ITEM	DESCRIPTION	P/N	Q"TY
1	11351HP89000S1	COVER, magneto	1
2	11483HP8900	GASKET, magneto cover	1
3	09247H12102	PLUG, tdc	1
4	09168H12003	GASKET, tdc plug	1
5	09259-26015	PLUG, crankshaft hole	1
6	09280-22008	O-RING, crankshaft hole plug	1
7	04213-09129	PIN, magneto cover knock	1
8	01547-06408	BOLT, magneto cover	8
9	01547-06458	BOLT, magneto cover	1
10	09403H09304	CLAMP, reverse cable	1
11	11360HP89000S1	COVER COMP, engine sprocket	1
12	27520HP8900	GUIDE COMP, drive chain	1
13	01547-06458	BOLT, engine sprocket cover	2
14	68241HP8900	LABEL, gear chain	1

Estel

<< BACK TO INDEX

7 CRANK SHAFT

FIG 7

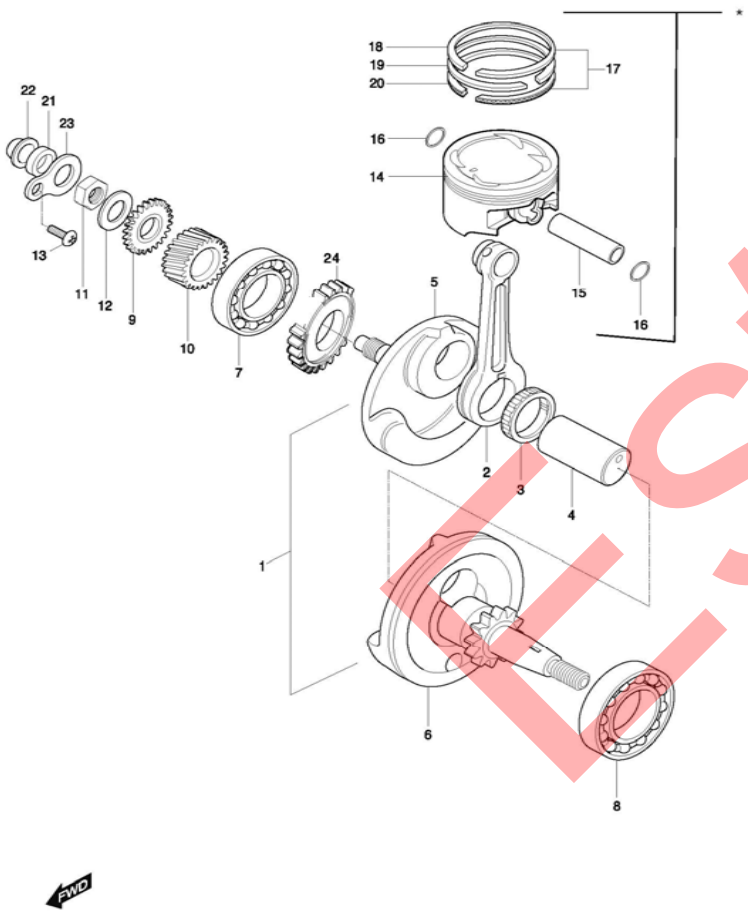

ITEM	DESCRIPTION	P/N	Q"TY
1	12200HP8900HPA	CRANK SHAFT ASS'Y	1
2	12161HP8900	ROD, connecting	1
3	09263H37001	BEARING, crank pin	2
4	12211HP8900888	PIN COMP, crank	1
5	12221HP8900CSA	CRANK SHAFT, R	1
6	12261HP8900CSA	CRANK SHAFT, L	1
7	08113-63060	BEARING, crank shaft R	1
8	08113-63070	BEARING, crank shaft L	1
9	17511HN9103	GEAR, water pump drive	1
10	21111HP8900	GEAR, primary drive	1
11	09140H18001	NUT, primary drive gear	1
12	09146H18001	WASHER, water pump deive gear lock	1
13	02112-00128	SCREW, crank shaft oil seal retainer	3
*	12110SP8900HPA	PISTON SET (piston + ring set + circlip)	1
14	12111HP8900PPS	PISTON	1
14-1	12111HP8920	PISTON(AL mono block)	1
15	12151HP8901	PIN, piston	1
15-1	12151HP8920	PIN, piston(AL mono block)	1
16	09381H19001	CIRCLIP, piston pin	2
16-1	09381H19001	CIRCLIP, piston pin(AL mono block)	2
17	12140HP8900	RINGSET, piston(R/no. 18+19+20)	1
17-1	12140HP8920	RINGSET, piston(AL mono block)	1
18	12141HP8900	RING, piston 1st	1
18-1	12141HP8920	RING, piston 1st(AL mono block)	1
19	12142HP8900	RING, piston 2nd	1
19-1	12142HP8920	RING, piston 2nd(AL mono block)	1
20	12144HP8900	RING, piston oil	1
20-1	12144HP8920	RING, piston oil(AL mono block)	1
21	09282-12001	SEAL, crank shaft oil rh	1
22	12291HN9100	JET, crank shaft R	1
23	12281HN9100	RETAINER, crank shaft oil seal	1
24	12660HP8900	GEAR CR BALANCER	1

Estela

8 STARTER CLUTCH

FIG.8

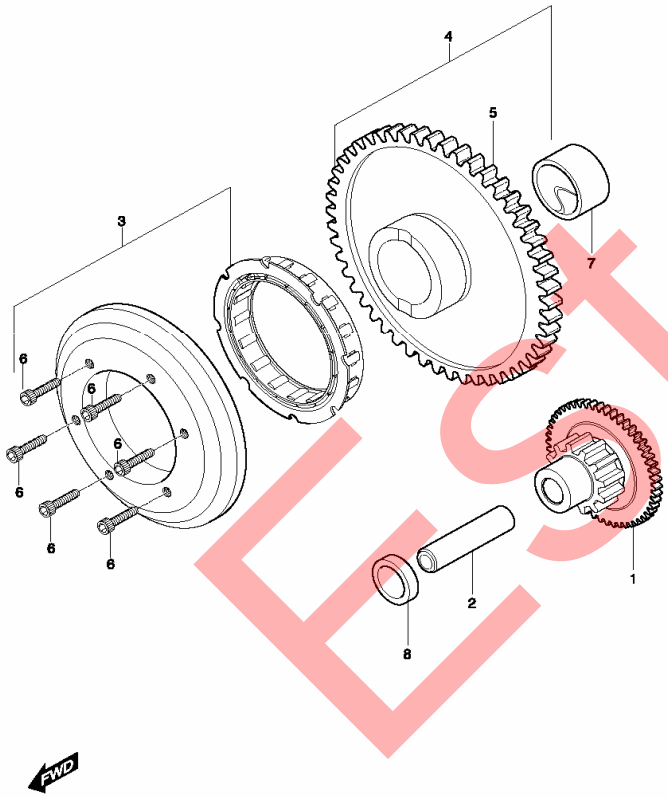

ITEM	DESCRIPTION	P/N	Q"TY
1	12611HN9100	GEAR, starter idle	1
2	12612HP8900	SHAFT, sharter idle gear	1
3	12614HP8900	CLUTCH, starter one way	1
4	12620HP8900HPA	GEAR COMP, starter clutch (R/no. 5-	1
5	12621HP8900	GEAR, starter clutch	1
6	07110-08168	BOLT, starter clutch	6
7	09263H25002	BEARING, starter clutch gear	1
8	09180H13001	SPACER, starter idle gear	1

Estelar

<< BACK TO INDEX

9 BALANCE GEAR

FIG.9

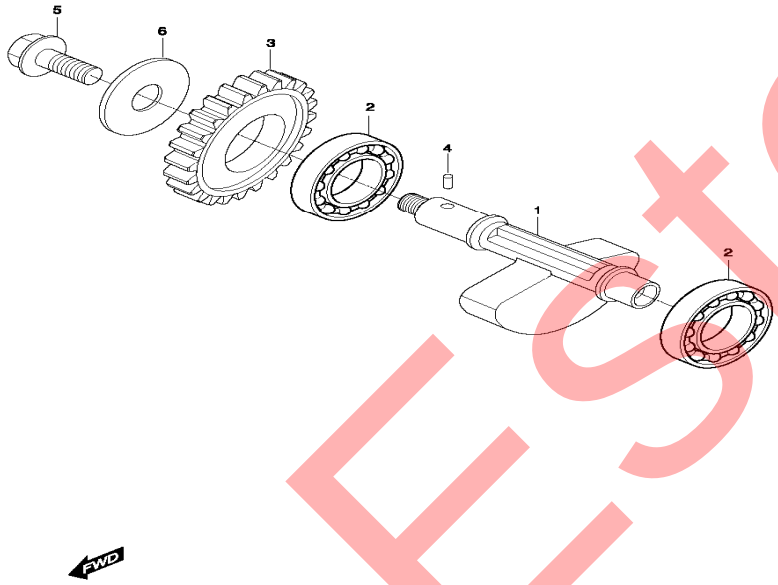

ITEM	DESCRIPTION	P/N	Q"TY
1	12651HP8900	BALANCER, crank	1
2	08113-62040	BEARING, crank balancer	2
3	12666HP8900	GEAR, crank balancer drive	1
4	04221-04069	PIN, balancer drive	1
5	01107-10168	BOLT, balancer	1
6	08211-10285	WASHER, balancer bolt	1

Estelar

<< BACK TO INDEX

10 CAMSHAF / VALVE

FIG 10

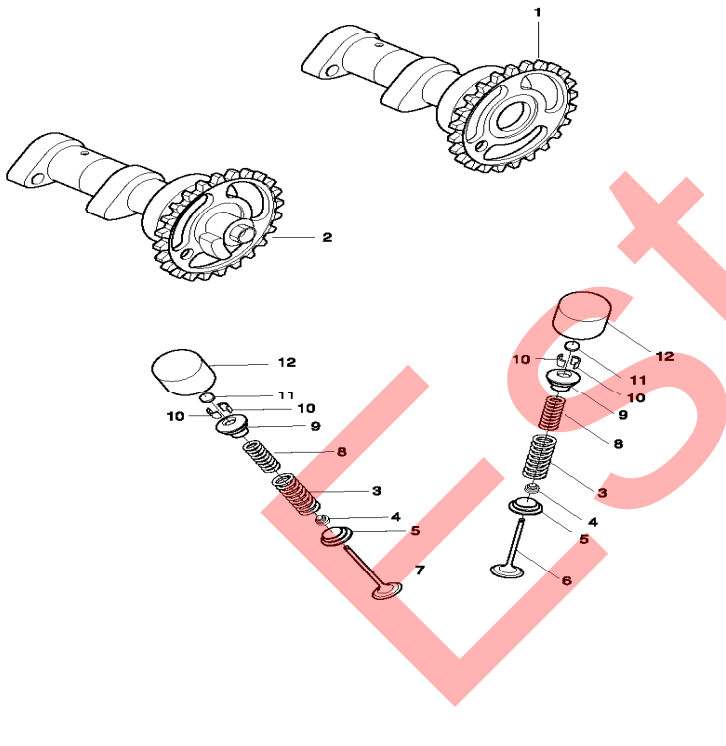

ITEM	DESCRIPTION	P/N	Q"TY
1	12710HP8900HPA	CAMSHAFT ASS'Y, intake	1
2	12720HP8900HPA	CAMSHAFT ASS'Y, exhaust	1
3	12922HP8900	SPRING, valve outer	4
4	09289-05008	SEAL, valve stem oil	4
5	12933HP8900	SEAT, valve spring	4
6	12911HP8900	VALVE, intake	2
7	12912HP8900	VALVE, exhaust	2
8	12921HP8900	SPRING, valve inner	4
9	12931HP8900	RETAINER, valve spring	4
10	12932HD6300	COTTER, valve	8
11	12892HP8900275	SHIM tappet	4
12	12881HP8900	TAPPET,	4

Estela

11 CAM CHAIN

FIG 11

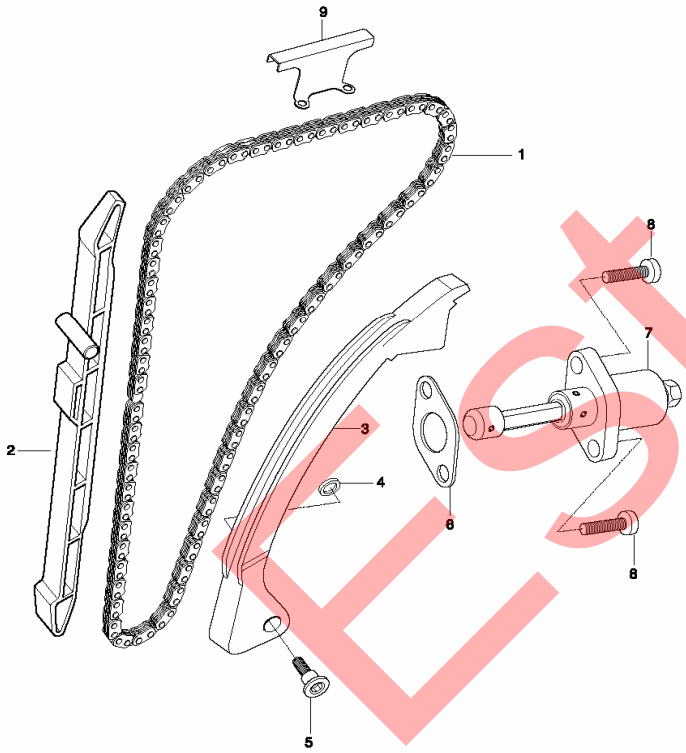

ITEM	DESCRIPTION	P/N	Q"TY
1	12760HP8900	CHAIN COMP, camshaft drive	2
2	12771HP8900	GUIDE, camchain NO.1	2
3	12811HN9101	TENSIONER, camchain	2
4	08211-06181	WASHER, camchain tensioner bolt	2
5	12812-35C00	BOLT, camchain tensioner	1
6	12837HP8900	GASKET, tensioner adjuster	1
7	12830HN9120	ADJUSTER ASS'Y, tensioner	1
8	07110-06208	BOLT, tensioner adjuster	2
9	12782HP8900	GUIDE, camchain NO.2	1

Estelar

12 CARBURATOR ASSY

FIG 12

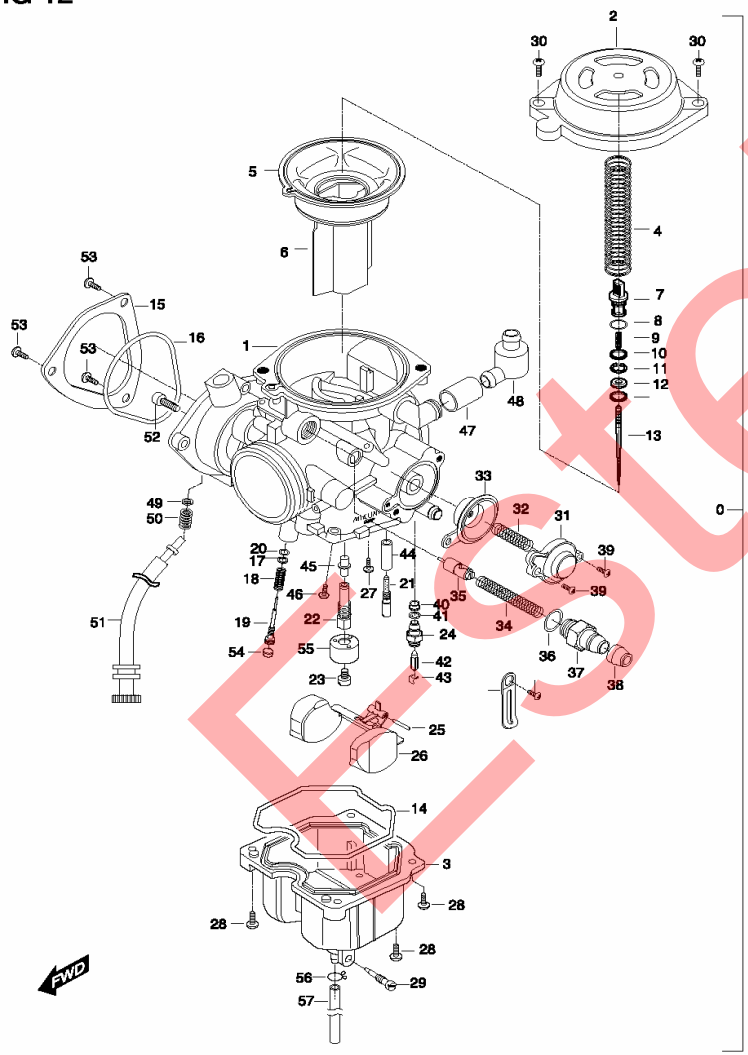

ITEM	DESCRIPTION	P/N	Q"TY
0	13200HS89A0	CARBURATOR ASS'Y	1
*	POWER- UP- KIT	POWER- UP- KIT	
	13324HP8900	MAIN JET	
	13551HP8900	PISTON VALVE	

Estela

13 AIR CLEANER & CHAMBER

<< BACK TO INDEX

FIG 13

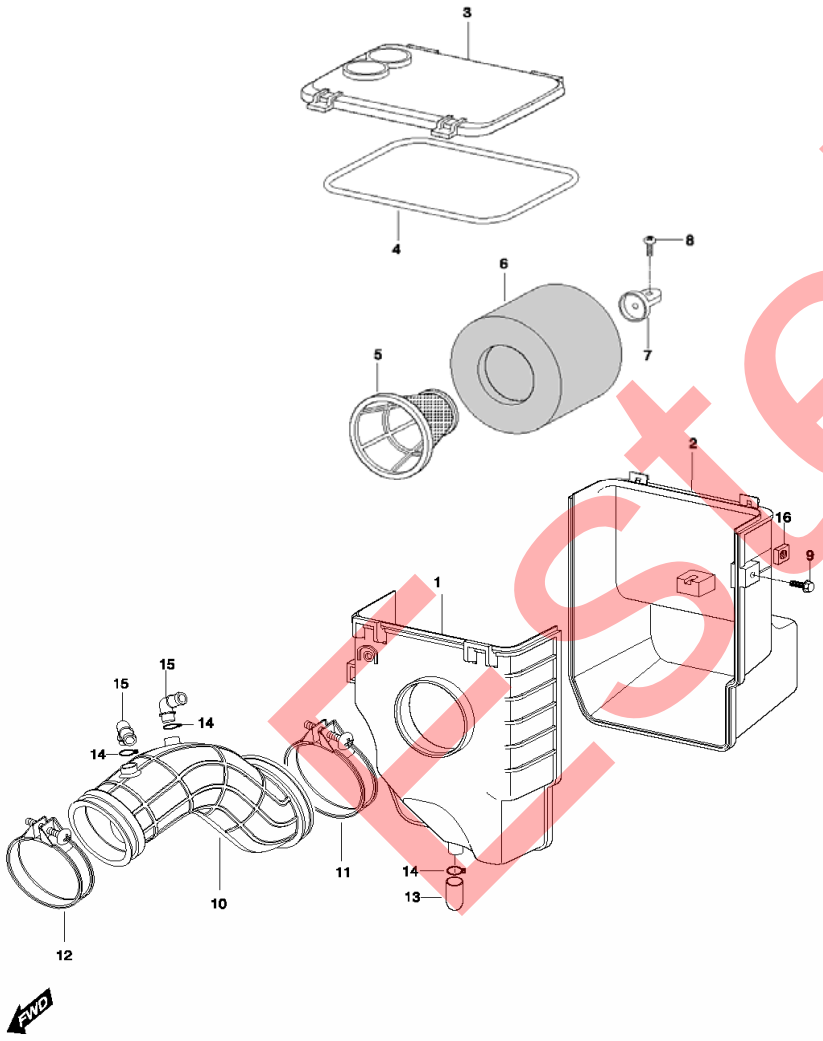

ITEM	DESCRIPTION	P/N	Q"TY
0	13700HP8900	CLEANER ASS'Y, air	1
1	13721HP8900	CASE, air cleaner front	1
2	13722HP8900	CASE, air cleaner rear	1
3	13741HP8900	CAP, air cleaner	1
4	13746HP8900	GASKET, air cleaner	1
5	13750HP8900	TRAP COMP, air cleaner	1
6	13780HP8900	FILTER COMP, air cleaner	1
7	13761HP8900	STOPPER, trap	1
8	02142-06125	SCREW, air cleaner	1
9	02142-06165	SCREW, air cleaner	3
10	13881HP8900	TUBE, outlet	1
11	09402-88207	CLAMP, outlet tube	1
12	09402-68207	CLAMP, outlet tube No.2	1
13	13895HF4500	PLUG, drain	1
14	09401-14301	CLIP, drain plug	3
15	13870HP8900	JOINT, breather hose	2
16	09152H06120	NUT, air cleaner	4

Estelar

14 MUFFLER

<< BACK TO INDEX

FIG 14

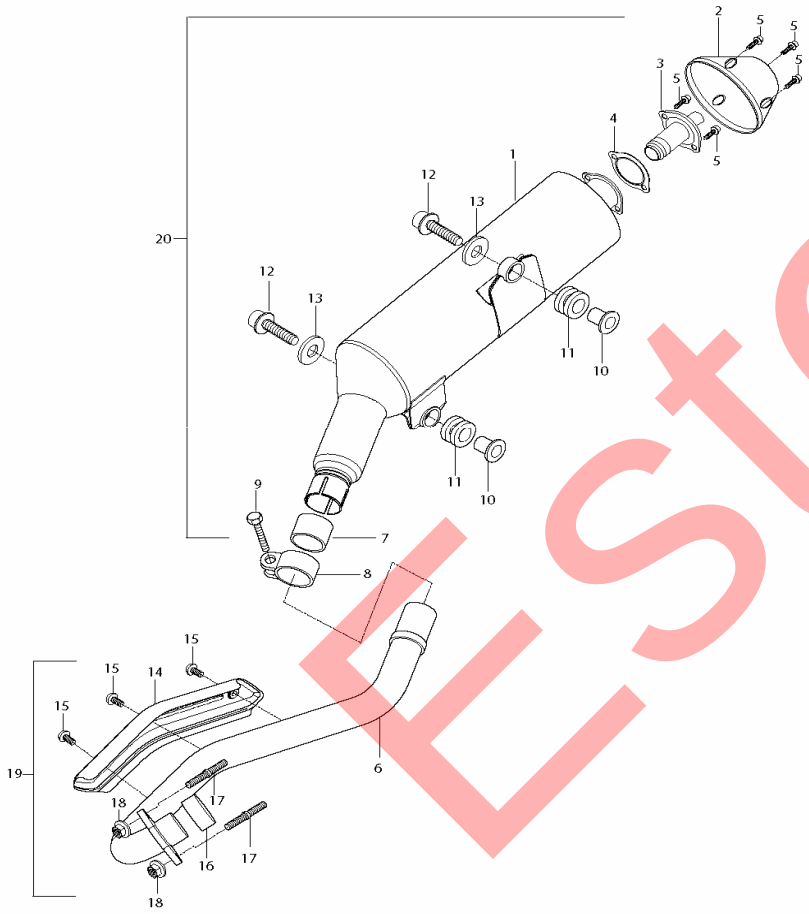

ITEM	DESCRIPTION	P/N	Q"TY
1	14310HS89A0	BODY COMP, muffler	1
2	14790HP8900	COVER COMP, muffler rear	1
3	14810HP8900	PIPE COMP, tail	1
4	14821HP8900	GASKET, tail pipe	1
5	09106H06150	BOLT, muffler cover	5
6	14150HP8900PLH	PIPE COMP, exhaust (REF 14 + 15)	1
7	14773HP8900	GASKET, exhaust connector	1
8	14770HP8900	CONNECTOR COMP, exhaust pipe	1
9	07120-08208	BOLT, exhaust pipe connector	1
10	41160HN9100	SPACER COMP, muffler support	2
11	09320H12059	CUSHION, muffler support	2
12	01517-08468	BOLT, muffler support	2
13	09160-08002	WASHER, muffler support	2
14	14280HP8900	COVER COMP, exhaust	1
15	09106H06080	BOLT, exhaust cover	3
16	14181HP8900	GASKET, exhaust pipe	1
17	01421-08258	BOLT, exhaust pipe stud	2
18	08316-26886	NUT, exhaust pipe	2
19	14150HP8900PLH	PIPE ASS'Y, exhaust	
20	14301HS89A0PLH	BODY ASS'Y, muffler	

Estel

<< BACK TO INDEX

FIG 15

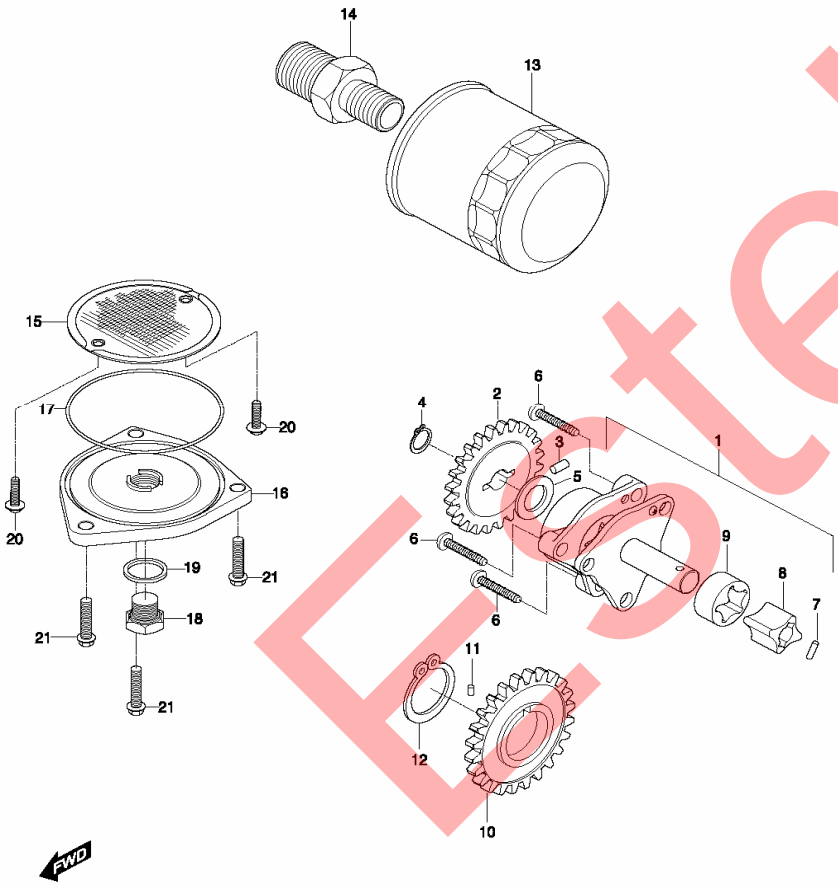

ITEM	DESCRIPTION	P/N	Q"TY
1	16400HP8900	PUMP ASS'Y, oil	1
2	16331HN9104	GEAR, oil pump driven	1
3	09261H04001	PIN, oil pump driven gear	1
4	08331-31109	CIRCLIP, oil pump driven gear	1
5	08221-10185	SHIM, oil pump driver gear	1
6	02122-06258	SCREW, oil pump	3
7	09262H04001	PIN, oil pump	1
8	16441HN9100	ROTOR, oil pump inner No.1	1
9	16442HN9100	ROTOR, oil pump inner No.2	1
10	16321HN9103	GEAR, oil pump driven	1
11	09261-06001	PIN, oil pump driven gear	1
12	08331-31389	CIRCLIP, oil pump driven gear	1
13	16510HP8900HAS	FILTER ASS'Y, engine oil	1
14	09362H20001	UNION, engine oil filter	1
15	16520-05202	STRAINER COMP, engine oil	1
16	16523-05200	CAP, oil strainer	1
17	09280-60005	O-RING, oil strainer cap	1
18	09247-14002	PLUG, oil drain	1
19	09168H14003	GASKET, drain plug	1
20	09128H05005	SCREW, engine oil strainer	2
21	01547-06208	BOLT, oil strainer cap	3

Estelar

16 OIL TANK

FIG.16

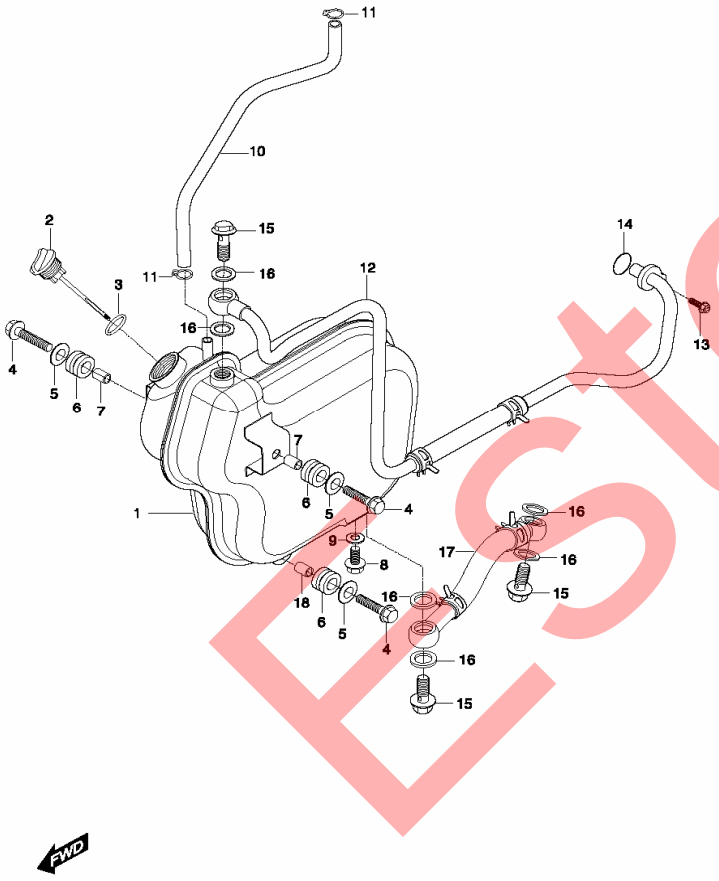

ITEM	DESCRIPTION	P/N	Q"TY
1	16610HP8900	TANK COMP, oil	1
2	11971HP8900	GAUGE, oil level	1
3	09280H17003	O-RING, oil level gauge	1
4	01104-06258	BOLT, oil tank	3
5	09160-06006	WASHER, oil tank	3
6	09320-10015	CUSHION, oil tank	3
7	09180-06006	SPACER, oil tank	2
8	01514-08128	BOLT, oil drain	1
9	09168-08008	GASKET, oil drain	1
10	16631HP8900	HOSE, oil tank overflow	1
11	09401-10401	CLIP, oil tank overflow hose	2
12	16460HP8900	HOSE COMP, oil No.1	1
13	07110-06168	BOLT, oil hose No.1	1
14	09280-10006	O-RING, oil hose No.1	1
15	09360H12007	BOLT, oil tank hose union	3
16	09168-14011	GASKET, oil tank hose	6
17	16470HP8900	HOSE COMP, oil No.2	1
18	09180-06030	SPACER, oil tank	1

Estelar

<< BACK TO INDEX

FIG.17

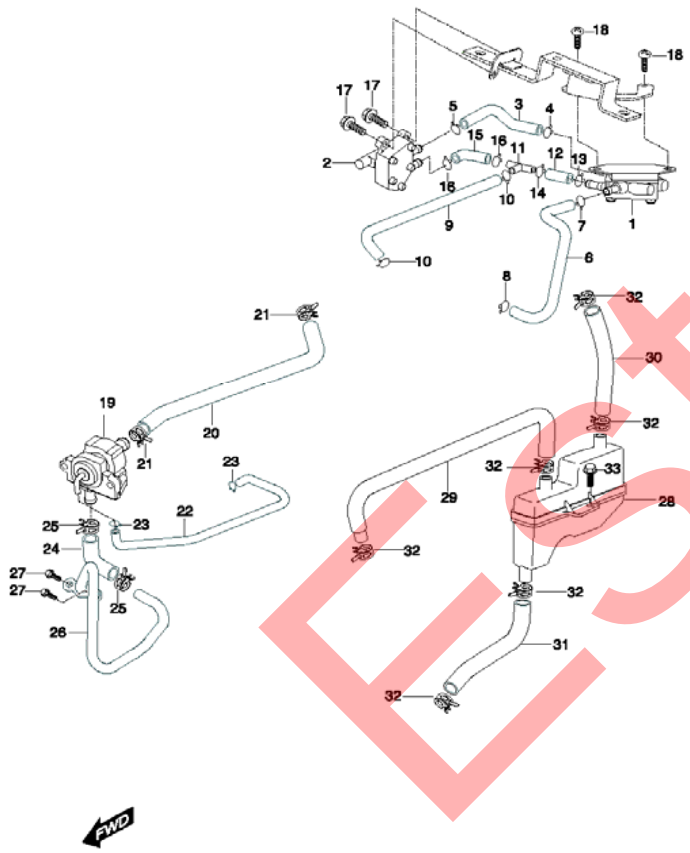

ITEM	DESCRIPTION	P/N	Q"TY
1	15100HG5100	PUMP ASS'Y, fuel	1
2	44300HP8900	COCK ASS'Y, fuel	1
3	44199HF1602	HOSE, fuel pump inlet	1
4	09401H11401	CLIP, fuel pump inlet hose No.1	1
5	09401-10401	CLIP, fuel pump inlet hose No.2	1
6	15821HP8900	HOSE, fuel pump outlet	1
7	09401H11401	CLIP, fuel pump outlet hose No.1	1
8	09401-10401	CLIP, fuel pump outlet hose No.2	1
9	15851HP8901	HOSE, intake pipe RH	1
10	09401H08401	CLAMP, intake pipe RH hose	2
11	09367H05001	NIPPLE, fuel pump joint	1
12	15831HP8900	HOSE, fuel pump vacuum	1
13	09401-09101	CLIP, fuel pump vacuum hose No.1	1
14	09401-08401	CLIP, fuel pump vacuum hose No.2	1
15	44197HP8900	HOSE, fuel cock vacuum	1
16	09401-08401	CLIP, fuel cock vacuum hose	2
17	02112-06166	BOLT, fuel cock	2
18	01517-06206	BOLT, fuel pump	2
19	18500HP8900	VALVE ASS'Y, 2nd air	1
20	18651HP8900	HOSE, 2nd outlet tube	1
21	09401H14401	CLAMP, 2nd air outlet tube hose	2
22	09352-50823	HOSE, 2nd vacuum	1
23	09401H08401	CLAMP, 2nd vacuum hose	2
24	18631HP8900	HOSE, 2nd air pipe	1
25	09401H13401	CLAMP, 2nd air pipe hose	2
26	18610HP8900	PIPE COMP, 2nd air	1
27	09128-06005	BOLT, 2nd air pipe	2
28	16810HP8900	TANK ASS'Y, breather oil return	1
29	16821HP8900	HOSE, breather oil return c/head	1
30	16841HP8900	HOSE, breather oil return tube	1
31	16831HP8900	HOSE, breather oil return cylinder	1
32	09401H14401	CLAMP, breather oil return	6
33	02112-06128	BOLT, breather oil return	1

Estelar

18 WATER PUMP

FIG.18

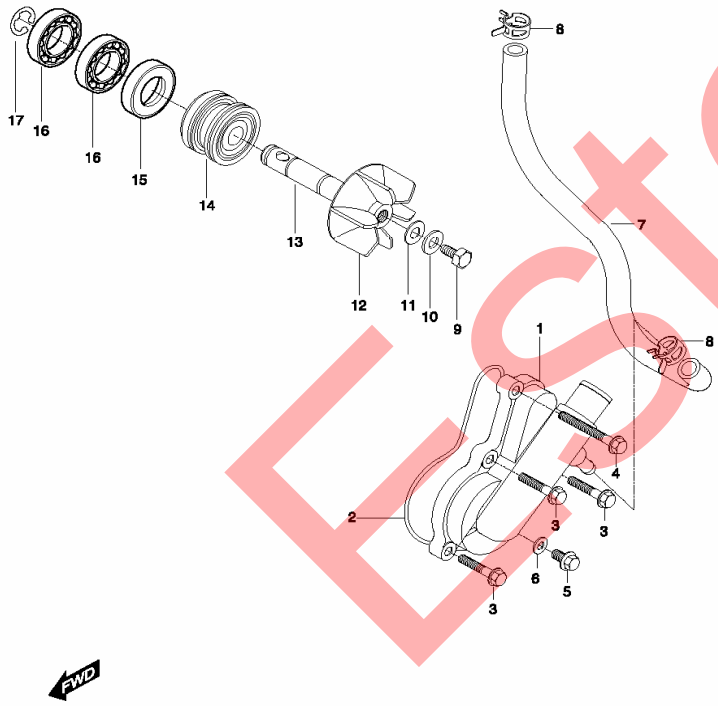

ITEM	DESCRIPTION	P/N	Q"TY
1	17410HP8900	CASE COMP, water pump	1
2	17461HP8900	O-RING, water pump case	1
3	01547-06258	BOLT, water pump case	3
4	01547-06708	BOLT, water pump case	1
5	01517-06128	PULG, water drain	1
6	09168H06019	GASKET, water drain plug	1
7	17641HP8900	HOSE, thermostat bypass	1
8	09401H13401	CLAMP, thermostat bypass hose	2
9	09100H06001	BOLT, impeller	1
10	09164H06001	WASHER, impeller rock	1
11	09168H06001	GASKET, impeller	1
12	17441HN9100	IMPELLER, water pump	1
13	17432HP8900	SHAFT, water pump	1
14	17470HN9100	SEAL, mechanical	1
15	09283H10001	SEAL, oil	1
16	08113-69000	BEARING, water pump	2
17	08332-11086	E-RING, water pump	1

Estelar

<< BACK TO INDEX

FIG 19

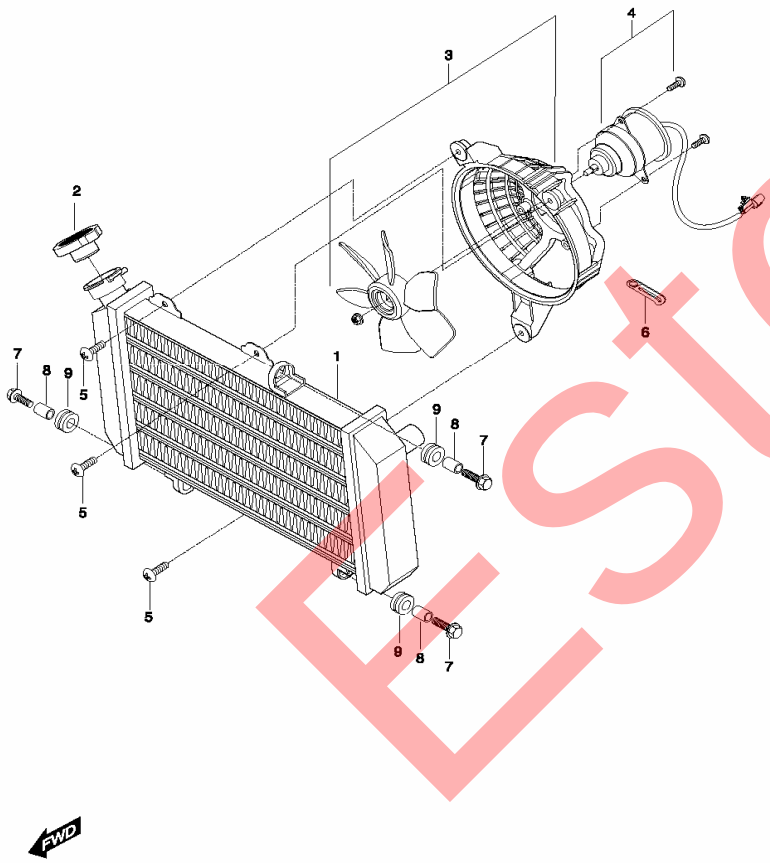

ITEM	DESCRIPTION	P/N	Q"TY
1	17710HP8900	RADIATOR COMP, water	1
2	17720HN9100	CAP COMP, radiator	1
3	17800HN9102	FAN ASS'Y, radiator	1
4	17810HN9100	MOTOR ASS'Y, radiator fan	1
5	02142-05165	BOLT, radiator fan	3
6	09404-06401	CLAMP, radiator fan	1
7	09116-06143	BOLT, radiator	3
8	09180-06030	SPACER, radiator	3
9	09320-10015	CUSHION, radiator	3

Estelar

20 RADIATOR HOSE

FIG.20

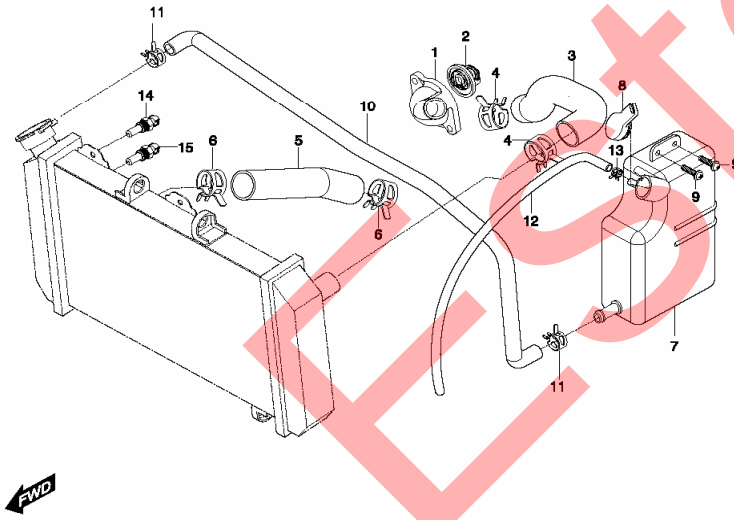

ITEM	DESCRIPTION	P/N	Q"TY
1	17631HP8900	CAP, thermostat connector	1
2	17610HP8900	THERMOSTAT COMP	1
3	17741HP8900	HOSE, radiator inlet	1
4	09401H26402	CLAMP, radiator inlet hose	2
5	17751HP8900	HOSE, radiator inlet	1
6	09401H26402	CLAMP, radiator inlet hose	2
7	17911HP8900	TANK COMP, reserver	1
8	17921HN9100	CAP, reserver tank	1
9	09136-06017	SCREW, reserver tank	2
10	17981HP8900	HOSE, radiator tank outlet	1
11	09401H11403	CLAMP, reserver tank hose	2
12	17982HP8900	HOSE, reserver tank overflow	1
13	09401H11403	CLAMP, reserver tank hose	1
14	17860HP8900	SWITCH ASSY, water temp	1
15	17860HN9100	SWITCH ASSY, thermo	1

Estelar

21 CLUTCH ASSY

FIG 21

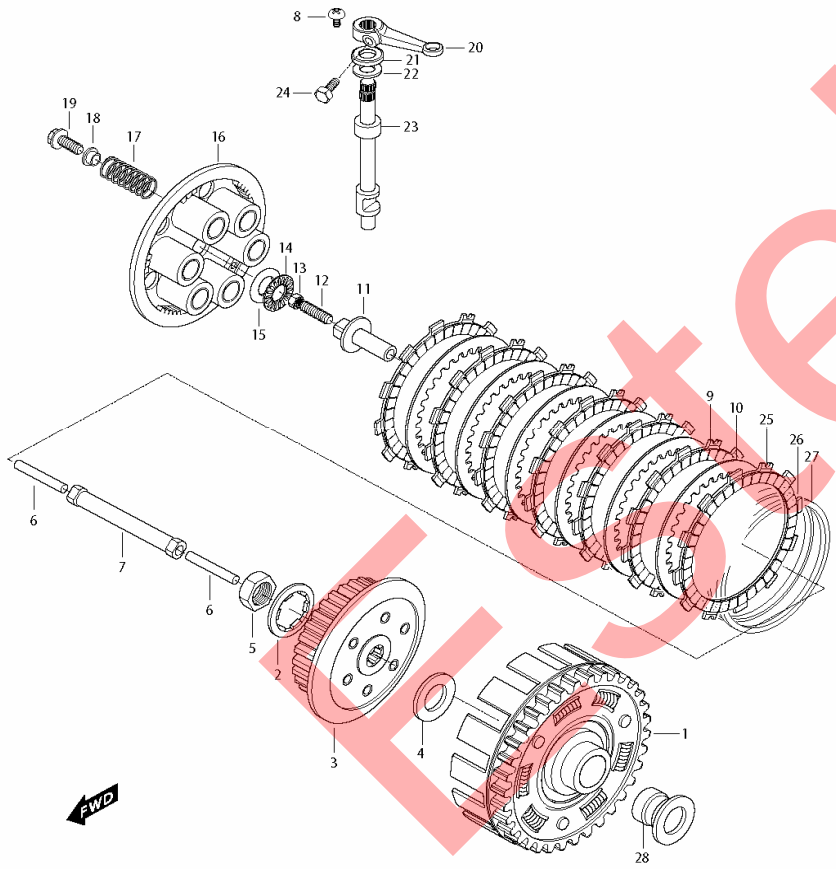

ITEM	DESCRIPTION	P/N	Q"TY
1	21200HP8900HPA	GEAR ASS'Y, primary driven	1
2	09160H20002	WASHER, clutch sleeve hub thrust	1
3	21411HN9102	HUB, clutch sleeve	1
4	09160H20002	WASHER, primary driven gear thrust	1
5	09140H20001	NUT, clutch sleeve hub	1
6	23114HN9100	ROD, clutch push	2
7	23110HP8900	ROD COMP, clutch push M	1
8	09136-06017	STOPPER, clutch release camshaft oil	1
9	21441HN9100	PLATE, clutch drive	6
10	21451HN9100	PLATE, clutch driven	6
11	23121-38201	PIECE, clutch push	1
12	09134-06010	SCREW, clutch release adjuster	1
13	08310-22068	NUT, clutch release adjust	1
14	09263H15001	BEARING, clutch release thrust	1
15	09160-15015	WASHER, clutch release thrust	1
16	21462HN9101	DISK, clutch pressure	1
17	09440H20003	SPRING, clutch	6
18	21471HN9100	RETAINER, clutch spring	6
19	09100H06009	BOLT, clutch spring	6
20	23271HP8900	ARM, clutch release	1
21	09282H12002	OIL SEAL, clutch release camshaft	1
22	08211-12281	THRUST WASHER, clutch release ca	1
23	23122HP8900	SHAFT, clutch release cam	1
24	01107-06208	BOLT, clutch release arm	1
25	21442HN9100	PLATE, clutch driven No.2	1
26	21443HN9100	WASHER, clutch wave	1
27	21444HN9100	SEAT, clutch wave washer	1
28	21251HP8900	SPACER, primary driven gear	1

Estelar

22 TRANSMISSION

FIG.22

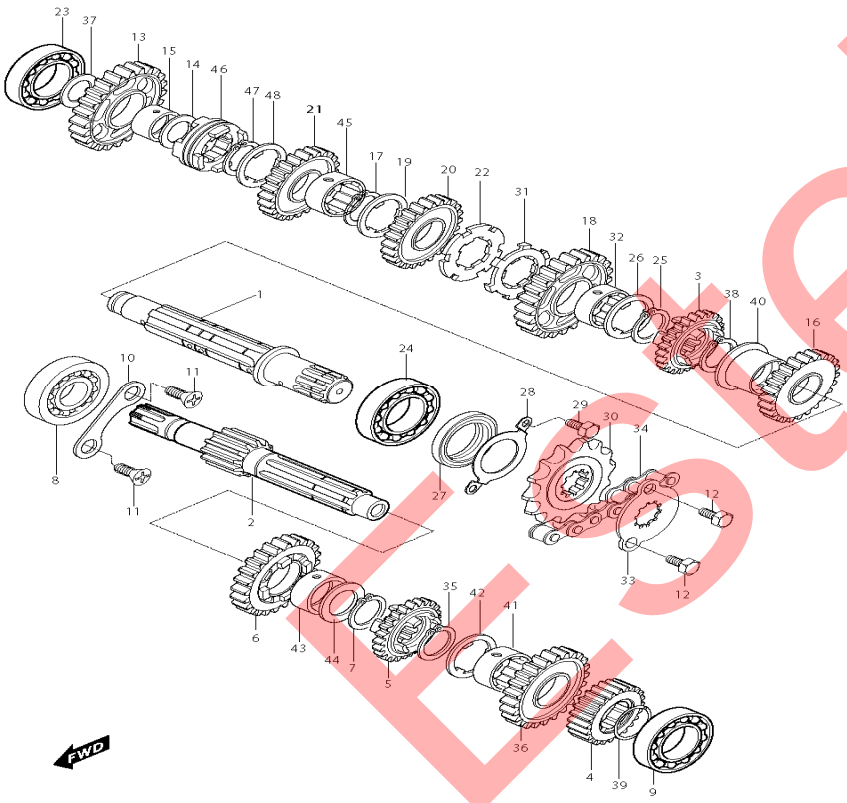

ITEM	DESCRIPTION	P/N	Q"TY
0	24200HP8900HPA	MISSION GR SET	1
1	24130SP8900HPA	SHAFT COMP, drive(with plug)	1
2	24120HP8900HPA	SHAFT ASS'Y, counter	
3	24341HP8900	GEAR, 4th driven (26T)	1
4	24221HP8900	GEAR, 2nd drive (19T)	1
5	24231HP8900	GEAR, 3rd drive (23T)	1
6	24251HP8900	GEAR, 5th drive (26T)	1
7	09380H25001	CIRCLIP, 5th drive gear	1
8	08113-63040	BEARING, counter shaft R(#6304)	1
9	08123-62030	BEARING, counter shaft L	1
10	24741HP8900	RETAINER, counter shaft bearing	1
11	02112-06128	SCREW, counter shaft bearing rtng	2
12	01517-06128	BOLT, engine sprocket	2
13	24311HP8900	GEAR, 1st driven (33T)	1
14	09181H20001	SHIM, 1st driven gear	1
15	24312HP8900	BUSH, 1st driven gear	1
16	24321HP8900	GEAR, 2nd drive (32T)	1
17	09380H25001	CIRCLIP, 4th driven gear	1
18	24331HP8900	GEAR, 3rd driven (29T)	1
19	09167H25001	THRUST WASHER, 5th driven gear	1
20	24351HP8900	GEAR, 4th reverse driven (23T)	1
21	24521HP8900	GEAR, reverse driven (29T)	1
22	09167H25002	WASHER, 3rd & 4th driven gear th	1
23	08113-62030	BEARING, drive shaft R	1
24	08123-63050	BEARING, drive shaft L	1
25	09380H25001	CIRCLIP, 3rd driven gear	1
26	09167H25001	WASHER, 3rd driven gear	1
27	09283H25003	OIL SEAL, drive shaft	1
28	24751HP8900	RETAINER, drive shaft oil seal	1

Eseloil

22 TRANSMISSION

FIG.22

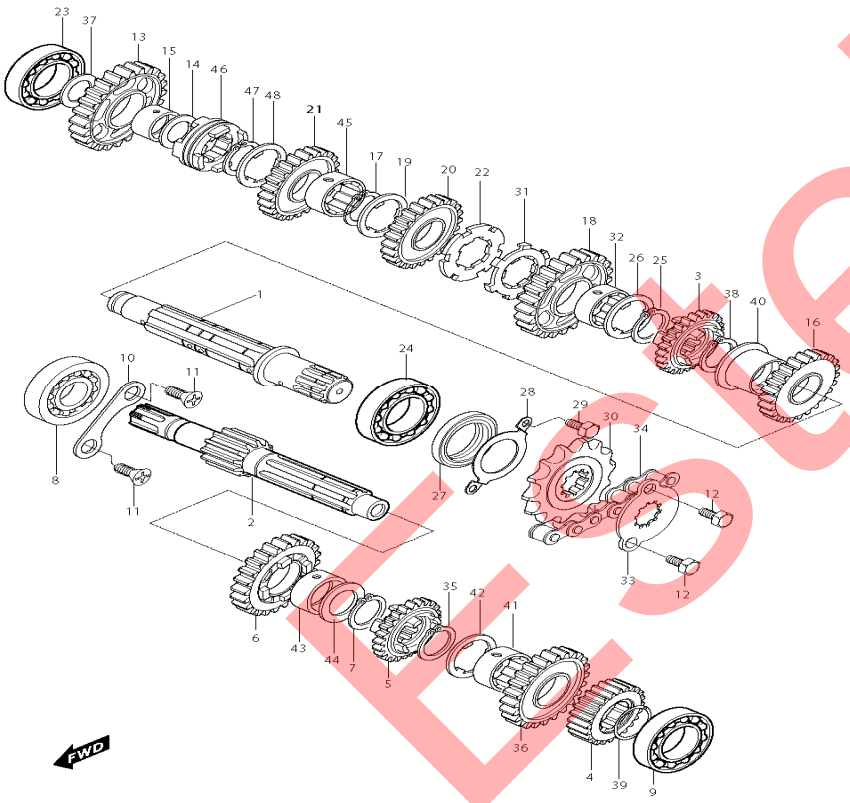

ITEM	DESCRIPTION	P/N	Q"TY
29	01107-06106	BOLT, drive shaft oil seal retainer	2
30	27511HP8900	SPROCKET COMP, engine 14T(#520)	1
31	09167H25003	WASHER, thrust washer lock	1
32	24332HN9100	BUSH, 3rd driven gear	1
33	27512HP8900	LOCK WASHER, engine sprocket	1
34	27600HP8900	CHAIN ASS'Y, drive 108L(#525)	1
35	09380H25001	.CILCLIP, 4th drive gear	1
36	24241HP8900	GEAR, 4th drive (25T)	1
37	09181H17001	SHIM, drive shaft	1
38	09380H25001	CILCLIP, 2nd driven gear	1
39	09380H22001	CILCLIP, 2nd drive gear	1
40	24322HN9100	BUSH, 3nd driven gear	1
41	24262HN9100	BUSH, 4th drive gear	1
42	09167H25001	WASHER, 4th drive gear	1
43	24252HN9100	BUSH, 5th drive gear	1
44	09181H25001	SHIM, 5th drive gear	1
45	24332HN9100	BUSH, reverse driven gear	1
46	24441HP8900	WHEEL, sliding dog	1
47	09380H25001	CIRCLIP, reverse driven gear	1
48	09167H25001	WASHER, reverse driven gear	1

Eseel

<< BACK TO INDEX

FIG 23

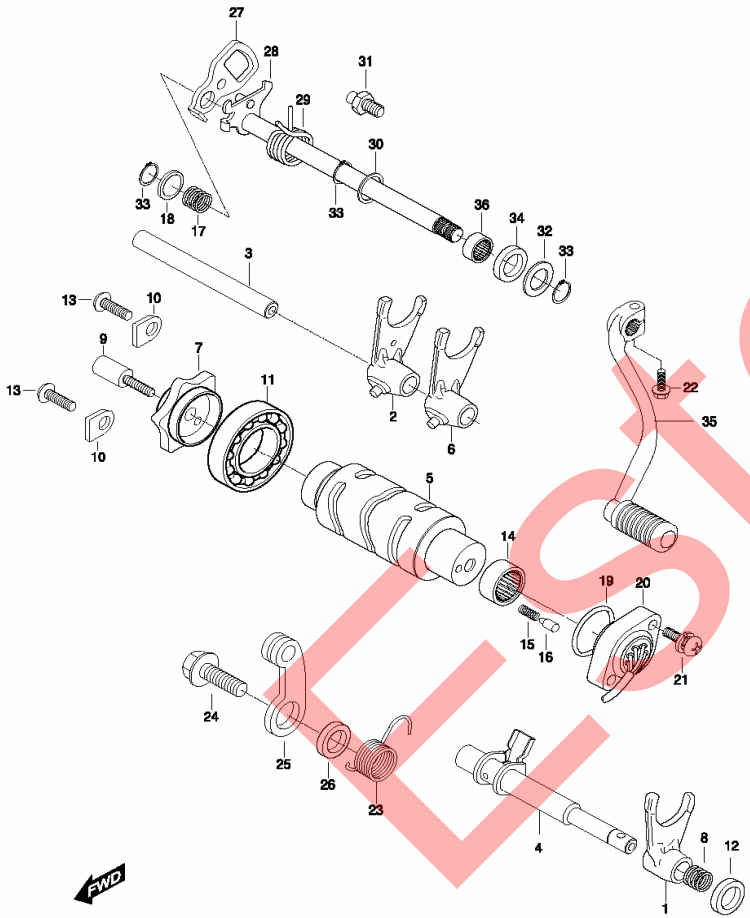

ITEM	DESCRIPTION	P/N	Q"TY
1	25231HN9100	FORK, gear shift No.3	1
2	25211HP8900	FORK, gear shift No.1	1
3	25411HN9100	SHAFT, gear shift fork No.2	1
4	25410HP8900	SHAFT, gear shift fork No.1	1
5	25310HP8900	CAM COMP, gear shift	1
6	25221HP8900	FORK, gear shift No.2	1
7	25380HN9105	PLATE COMP, gear shift cam	1
8	09440H10001	SPRING, gear shift fork No.1 return	1
9	25321HN9100	BOLT, gear shift cam plate	1
10	24741HN9100	RETAINER, gear shift cam bearing R	2
11	09262H25002	BEARING, gear shift cam R	2
12	09282-10007	SEAL, gear shift fork No.1 oil	1
13	02122-06128	SCREW, gear shift cam bearing retain	2
14	09263H25002	BEARING, gear shift cam L	1
15	09440-04010	SPRING, gear shift shift contact	1
16	09209-05011	CONTACT, gear shift switch	1
17	09440H17001	SPRING, gear shift cam drive plate	1
18	09181H14001	SHIM, gear shift shift thrust	2
19	09280-26007	O-RING, gear shift switch	1
20	37720HP8900	SWITCH ASS'Y, gear shift	1
21	02112-95208	SCREW, gear shift switch	2
22	01104-06208	BOLT, gear shift lever	1
23	09448H17002	SPRING, gear shift cam stopper	1
24	09111-06019	BOLT, gear shift cam stopper	1
25	25350HN9100	STOPPER COMP, gear shift cam	1
26	08211-06141	WASHER, gear shift shaft thrust	1
27	25521HN9100	PLATE, gear shift cam drive	1
28	25510HP8900	SHAFT COMP, gear shift	1
29	09444H20011	SPRING, gear shift shaft return	1

Estelar

<< BACK TO INDEX

FIG 23

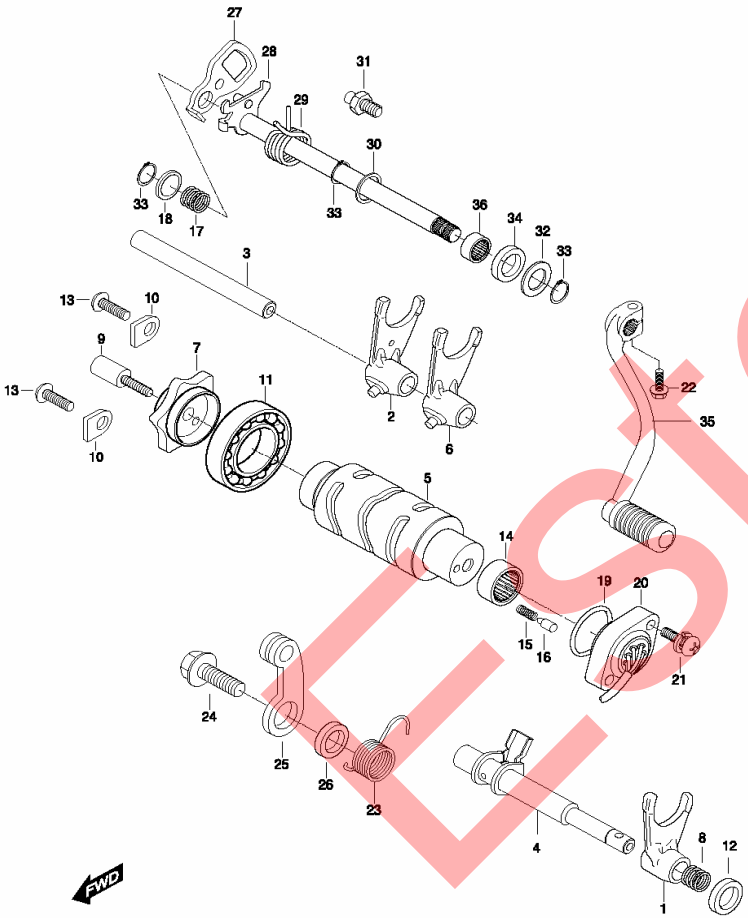

ITEM	DESCRIPTION	P/N	Q"TY
30	09180H14001	SHIM, gear shift shaft	1
31	25671-01000	STOPPER, gear shift arm	1
32	09160H14003	WASHER, gear shift shaft thrust	1
33	08331-31149	CIRCLIP, gear shift shaft	3
34	09283H14002	SEAL, gear shift shaft oil	1
35	25600HP8900	LEVER ASS'Y, gear shift cam	1
36	09263H14002	BEARING, gear shift shaft	1

Estelar

<< BACK TO INDEX

FIG 24

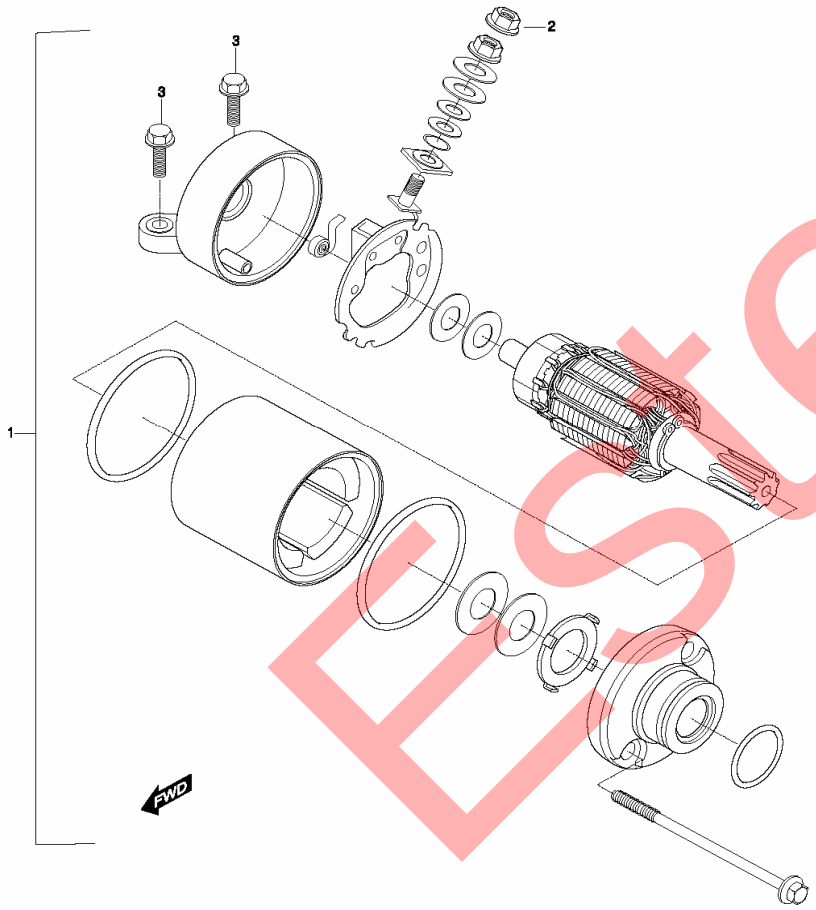

ITEM	DESCRIPTION	P/N	Q"TY
1	31100HP8900	MOTOR ASSY, starting	1
2	08316-16068	NUT, starter motor terminal	1
3	01547-06258	BOLT, start motor bracket	2

Estelar

25 MAGNETO ASSY

FIG 25

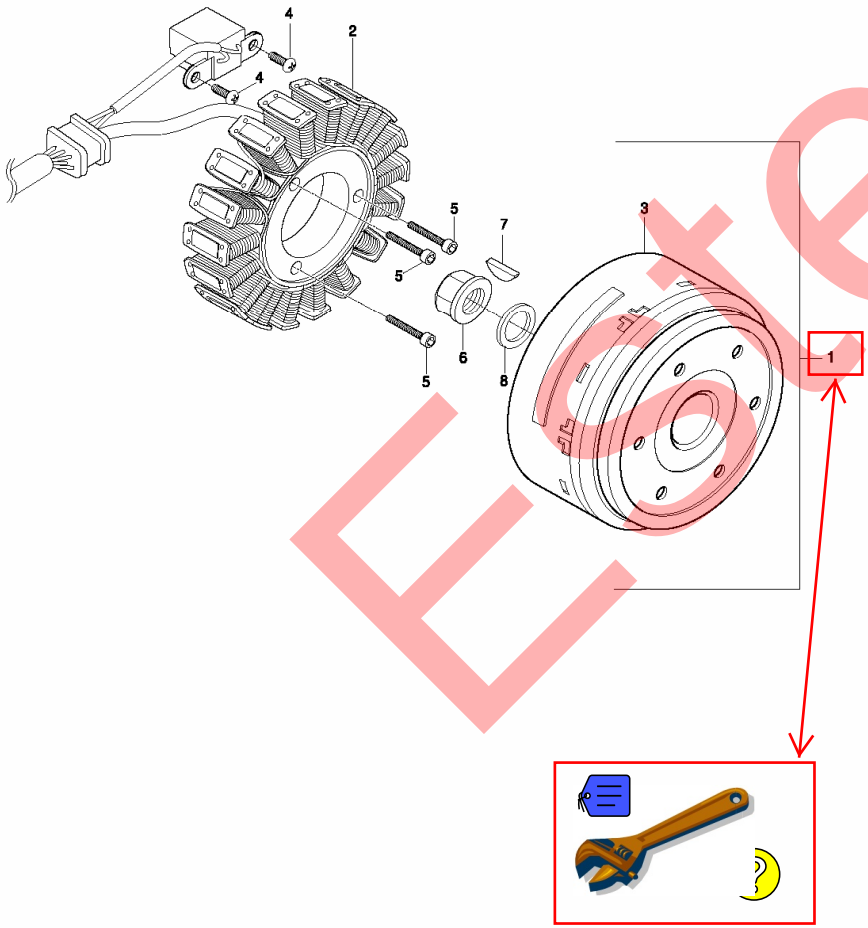

ITEM	DESCRIPTION	P/N	Q"TY
1	32100HP8900	MAGNETO ASS'Y	1
2	32101HP8900	STATOR ASS'Y	1
3	32102HP8900	ROTOR, fly wheel	1
4	02142-05128	SCREW, pick-up coil(M5X12)	2
5	07110-06308	BOLT, magneto stator(M6X30)	3
6	08316-26128	NUT, magneto	1
7	09420H04001	KEY, magneto	1
8	09160H12003	WASHER, magneto	1

Estelar

<< BACK TO INDEX

FIG 26

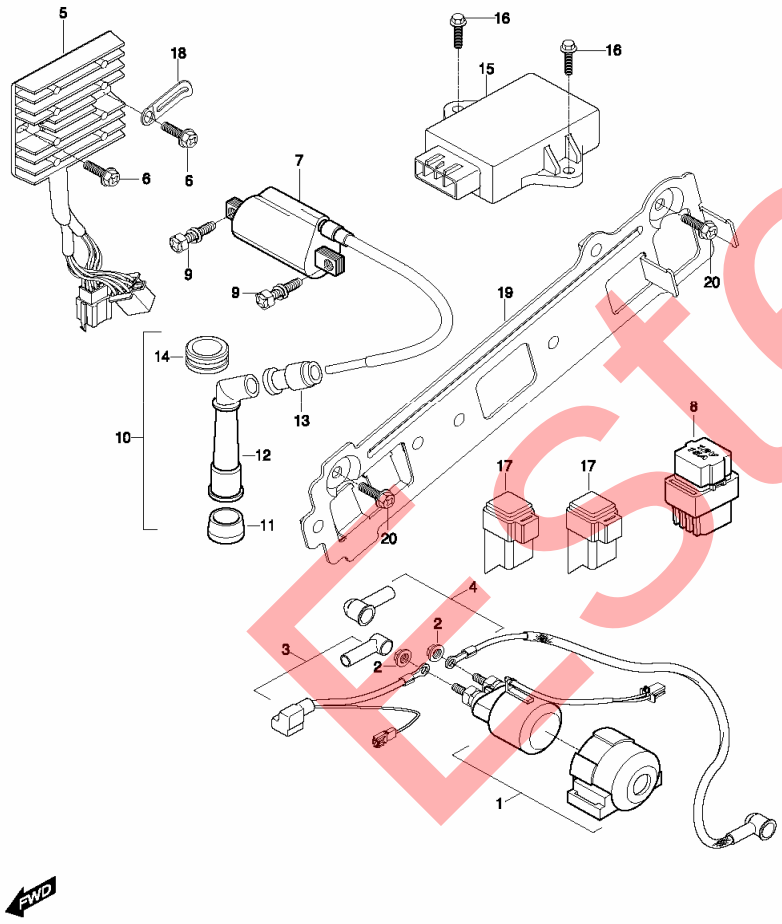

ITEM	DESCRIPTION	P/N	Q"TY
1	31800HG5100	RELAY ASS'Y, starting motor	1
2	08316-26066	NUT, starter motor relay terminal	2
3	33840HP8900	LEADWIRE, battery plus	1
4	33850HP8900	LEADWIRE, starter motor	1
5	32800HP8900	RECTIFIER regulator ass'y	1
6	01517-06166	BOLT, restifier	2
7	33410HP8900	COIL ASS'Y,ignition	1
8	36740-35C00	BOX ASS'Y, fuse(15A)	1
9	01174-05208	BOLT, ignition coil	2
10	33500HN9100	CAP ASS'Y spark plug	1
11	33541-23E01	SEAL, spark plug	1
12	33510-05C01	CAP, spark plug	1
13	33542-98000	SEAL, high tention cord	1
14	33545HN9100	BUSH, spark plug cap	1
15	32900HP8900	IGNITOR, ASS'Y	1
16	01517-06166	BOLT, ignition	2
17	38740HG5100	RELAY ASS'Y	2
18	09404-06401	CLAMP, rectifier regulator L / wire	1
19	42121HP8900	PLATE, electric part	1
20	02142-06126	SCREW, electric part plate	2

Estelar

27 BATTERY

FIG 27

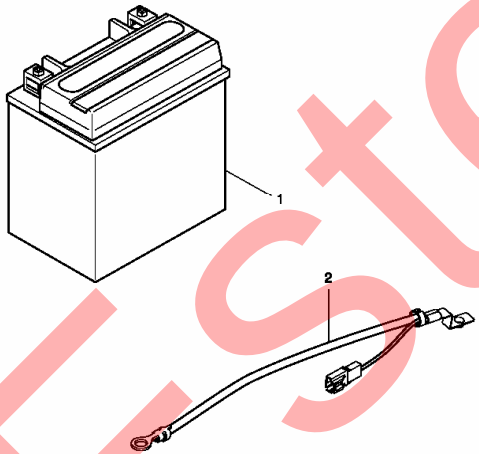

ITEM	DESCRIPTION	P/N	Q"TY
1	33610HG5100	BATTERY ASS'Y(12V 8Ah. STX9-B	1
2	33860HP8900	LEAD WIRE, battery minus	1

Estelar

28 HEAD LAMP

<< BACK TO INDEX

FIG.28

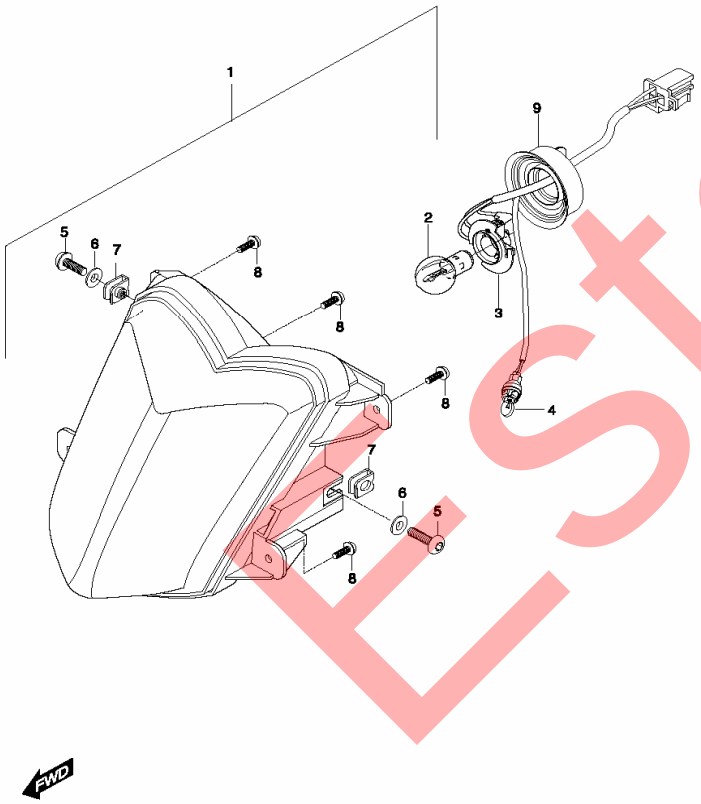

ITEM	DESCRIPTION	P/N	Q"TY
1	35100HP8950	HEAD LAMP ASS'Y	1
2	09471-12103	BULB, head lamp(12v S2 35/35w)	1
3	35171HP8950	SOCKET ASS'Y	1
4	09471-12110	BULB, position lamp	1
5	09106H06200	BOLT, head lamp	2
6	09160-06006	WASHER, head lamp	2
7	09148-05039	NUT, head lamp	2
8	03241-06166	SCREW, head lamp	2

Estelar

29 REAR COMBINATION

FIG 29

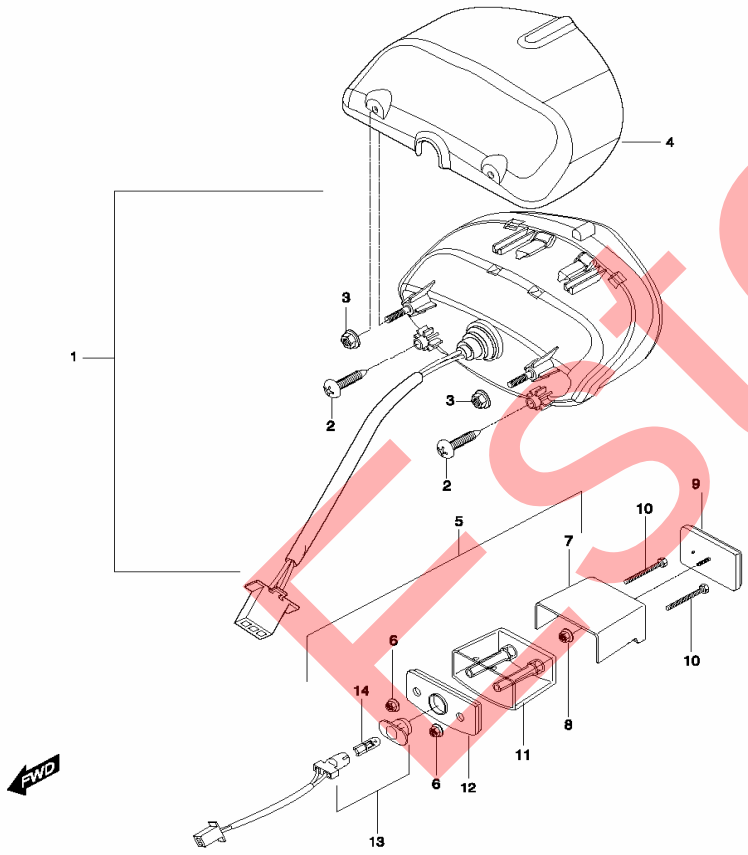

ITEM	DESCRIPTION	P/N	Q"TY
1	35710HP9500	LAMP ASS'Y, tail & stop	1
2	03241-05166	SCREW, tail & stop	2
3	08316-26055	NUT, tail & stop	2
4	35780HP8900	COVER, tail & stop	1
5	35910HG5150	LAMP ASSY, license plate	1
6	08316-26055	COVER, license lamp	2
7	35915HL7300	NUT, license lamp(M5)	2
8	08316-26055	NUT, license lamp	2
9	35970HP8900	COVER REFLEX REFLECTOR ASS'	1
10	01107-05605	sCREW, license lamp	2
11	35911HG5800	LENS, license	1
12	35912HG5800	HOUSING, license	1
13	35916HG5800	CORD ASS'Y	1
14	09471-12150	BULB, license lamp(12V/5W)	1

Estelar

30 FRONT TURN SIGNAL LAMP

FIG.30

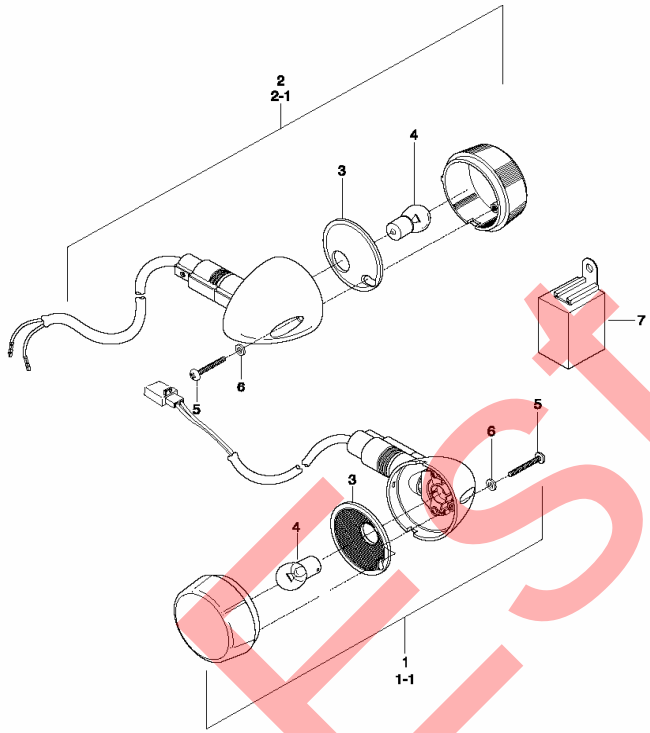

ITEM	DESCRIPTION	P/N	Q"TY
1	35601HP9501	LAMP ASS'Y, Ft turnsignal R	1
1-1	35602HP9501	LAMP ASS'Y, Ft turnsignal L	1
2	35603HP8900	LAMP ASS'Y, Rr turnsignal R	1
2-1	35604HP8900	LAMP ASS'Y, Rr turnsignal L	1
3	35614HP9500	REFLECTOR, turnsignal	2
4	09471H12112	BULB, (12V)	2
5	02142-05246	SCREW, turnignal lamp	2
6	35609H93B00	VINYL WASHER	2
7	38610HL7300	RELAY ASS'Y, turnsignal	1

Estelar

31 SPEEDOMETER ASSY

FIG 31

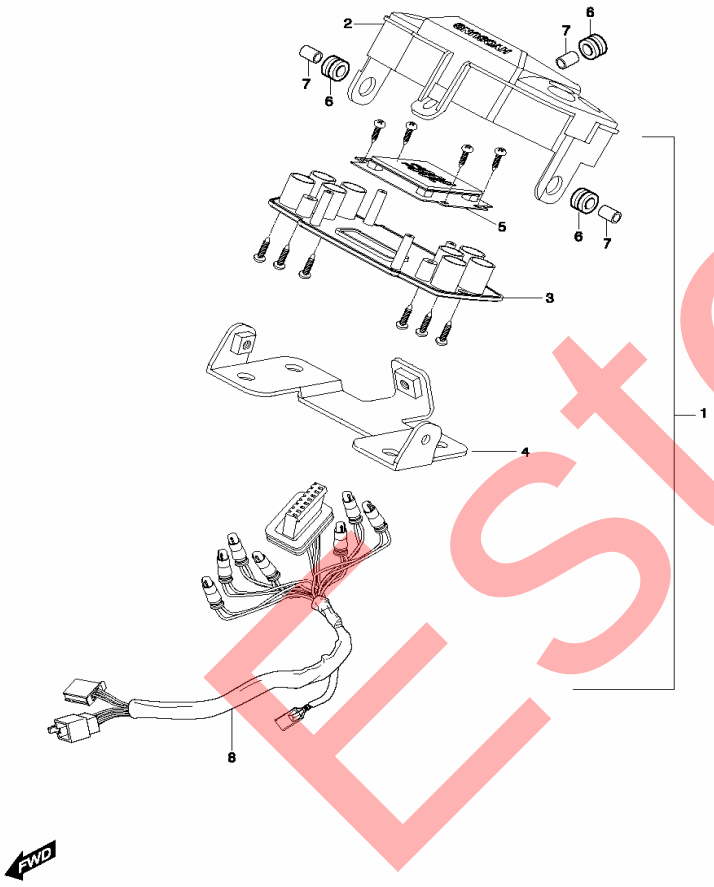

ITEM	DESCRIPTION	P/N	Q"TY
1	34100HP8900	SPEEDOMETER ASS'Y	1
2	34150HP8900	WINDOWS, case	1
3	34160HP8900	CASE SUB, housing	1
4	56172HP8900	BRACKET, steering head cover	1
5	34500HP8900	LCD ASS'Y, speedometer	1
6	94433H07C00	CUSHION, speedometer	3
7	09180-06011	BUSH, speedometer	3
8	34170HP8900	WIRING ASS'Y, speedometer	1
9	34860HP8900	SENSOR ASS'Y, speedometer	1
10	09407-20406	CLAMP, speed sensor	3

Estelar

32 WIRING HARNESS

<< BACK TO INDEX

FIG.32

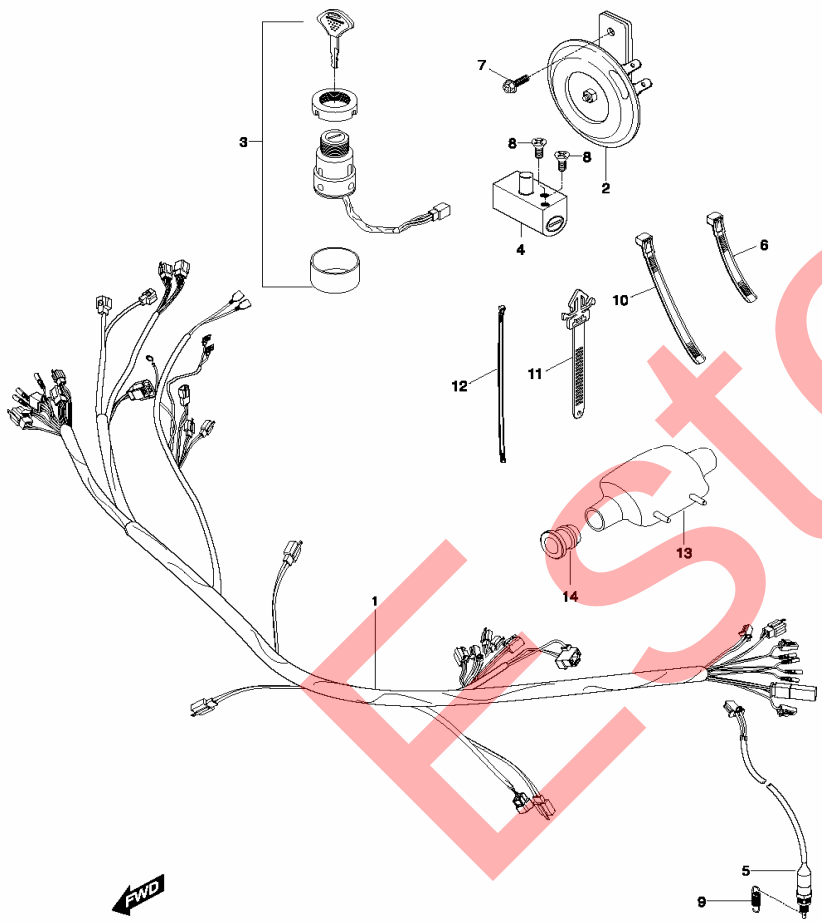

ITEM	DESCRIPTION	P/N	Q"TY
1	36610HP8901	HARNESS, wiring	1
2	38500HR8300	HORN ASS'Y	1
3	37100HP8900	SWITCH ASS'Y, ignition	1
4	51900HP8900	LOCK ASSY, steering	2
5	37740HP8900	SWITCH ASS'Y, rear stop	1
6	09407-14403	CLAMP, wiring harness	3
7	09128-06005	BOLT, horn	1
8	02122-06128	SCREW, steering lock	2
9	09443-06058	SPRING, rear stop switch	1
10	09407-22402	CLAMP, wiring harness	3
11	09407-14408	CLAMP, wiring harness	1
12	09407-20406	CLAMP, wiring harness	3
13	36618-30610	TUBE, wiring harness	2
14	09320H12061	GROMMET, rear fender	1

Estelar

<< BACK TO INDEX

FIG 33

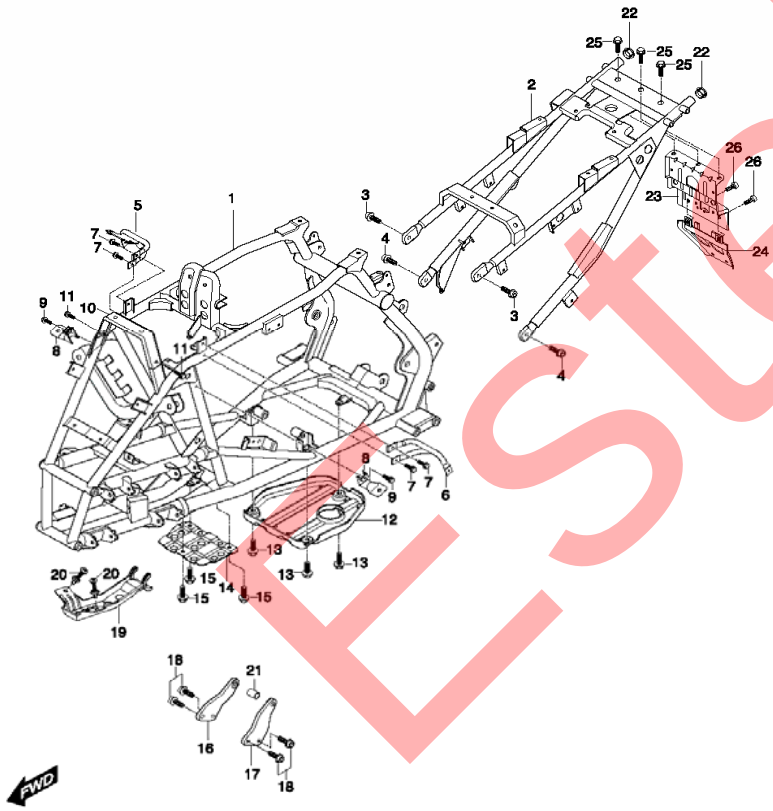

ITEM	DESCRIPTION	P/N	Q"TY
1	41100HP890003P	FRAME COMP	1
2	42100HP890003P	FRAME COMP, rear	1
3	07120-08258	BLT, rear frame upper	2
4	09106H10259	BOLT, rear frame lower	2
5	53120HP8900	BRACE COMP, front fender RH	1
6	53130HP8900	BRACE COMP, front fender LH	1
7	01517-06166	BOLT, front fender brace &frame	4
8	47171HP8900	BRACKET, side cover R/L	2
9	09106H06150	SCREW, side cover brake & frame	2
10	41146HP8900	PLATE, front fender	1
11	01517-06128	BOLT, front fender plate & frame	2
12	42511HP8900	PROTECT, engine lower	1
13	09106H06150	SCREW, engine lower protect	3
14	16421HP8900	PROTECT, oil tank	1
15	09407-08307	SCRIVET, oil tank protector	3
16	41993HP8900	PLATE, engine mounting front R	1
17	41994HP8900	PLATE, engine mounting front L	1
18	07120-08208	BOLT, engine mounting front lower	4
19	16422HP8900	PROTECTOR, oil tank rear	1
20	09106H06150	SCREW, oil tank protector	2
21	41995HP8900	SPACE, engine mounting front L	1
22	42199HP8900	CAP, rear frame main tube	2
23	63112HP8900	BRACKET, rear fender rear upper	1
24	63113HP8900	BRACKET, rear fender rear lower	1
25	01517-06166	BOLT, rr fender rr & front	3
26	09139H06016	SCREW, rr fender rr upper & lower	2

Estelar

34 REVERSE ASSY

<< BACK TO INDEX

FIG 34

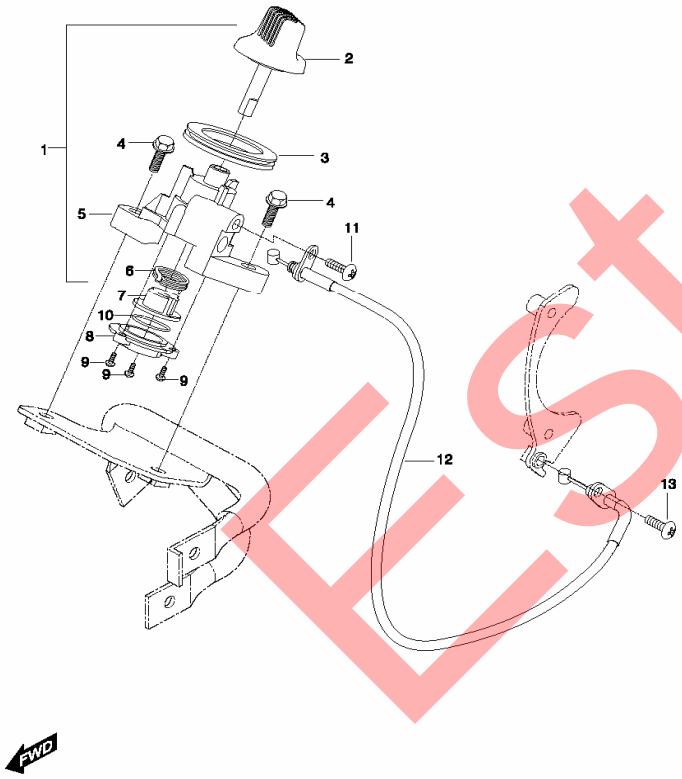

ITEM	DESCRIPTION	P/N	Q"TY
1	56900HP8900	LEVER ASSY, reverse	1
2	56910HP8900	LEVER COMP, reverse	1
3	09281H28001	DUST SEAL, reverse lever	1
4	01517-06165	BOLT, reverse lever ASS'Y	2
5	56921HP8900	HOUSING, reverse lever	1
6	09448H11001	SPRING	1
7	56922HP8900	SPOOL, reverse cable	1
8	56923HP8900	CAP, reverse lever housing	1
9	03211-03128	SCREW	3
10	09281H22001	DUST SEAL	1
11	02112-05106	SCREW	1
12	56400HP8900	CABLE COMP, reverse	1
13	02142-05125	SCREW, erverse cable & drive chain g	1

Estelar

<< BACK TO INDEX

FIG 35

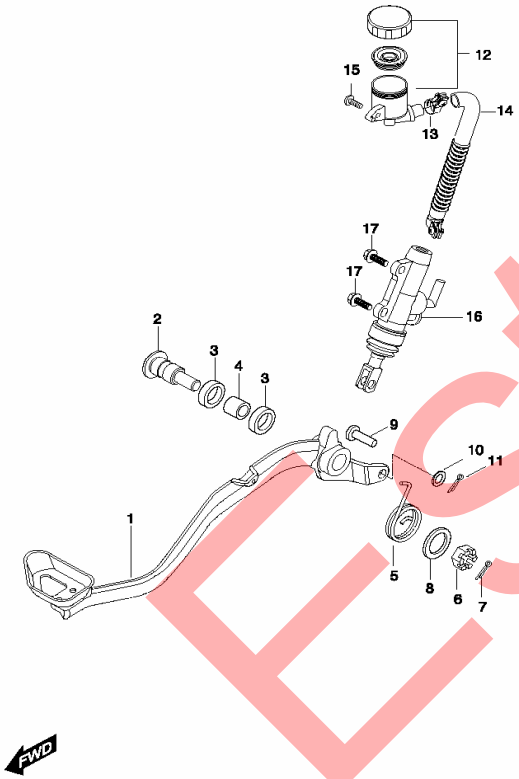

ITEM	DESCRIPTION	P/N	Q"TY
1	43110HP890003P	PEDAL COMP, rear brake	1
2	43114HP8900	BOSS, brake pedal	1
3	09284H16007	SEAL, brake peda;	2
4	43115HP8900	BUSH, brake pedal	1
5	09448H30002	SPRING, brakepedal , return	1
6	08314-40106	NUT, rear brake pedal	1
7	04111-20206	COTTER PIN, rr brake pedal bolt	1
8	08322-11106	WASHER, blake pedal	1
9	09200H06040	PIN, rear master cylinder	1
10	08322-21068	WASHER, rear master cylider	1
11	04111-20208	COTTER PIN, rear m/cylinder	1
12	69740HP8900	TANK ASS'Y, reservoir	1
13	69710HP8900	CLAMP, reserver tank hose	2
14	69700HP8900	HOSE ASS'Y, reservoir tank	1
15	09106H05150	SCREW, reservior tank	1
16	69609HP8900	CYLINDER ASS'Y, rear master	1
17	09106H06200	BOLT, master cylinder	2

Estelar

<< BACK TO INDEX

36 FRONT FOOTREST

FIG 36

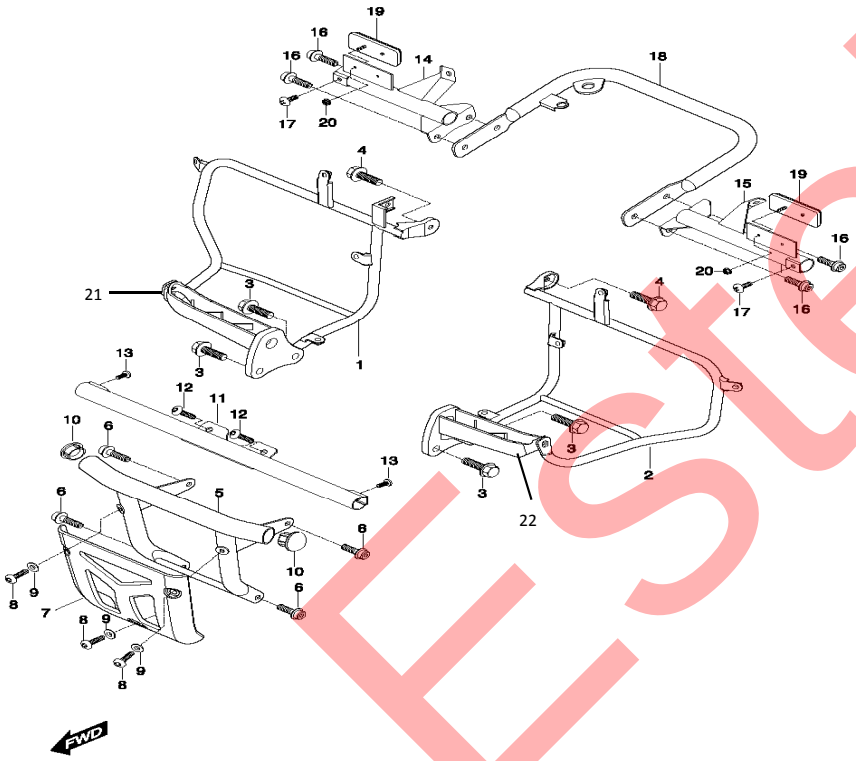

ITEM	DESCRIPTION	P/N	Q"TY
1	43530HP8900	BRACE, front footrest RH	1
2	43540HP8900	BRACE, front footrest LH	1
3	01517-10306	BOLT, footrest R/L	4
5	43990HP895003P	GRIP COMP, front	1
6	07120-08208	BOLT, front grip comp	4
7	43970HP8900	COVER, grip front	1
8	09106H06150	BOLT, grip front cover	3
9	09169H06078	WASHER, grip front cover	3
10	43999HP8900	CAP, front grip main pipie	2
11	51720HP8900	TUBE COMP, front turnsignal	1
12	09106H06150	BOLT, front turnsignal tube comp	2
13	02142-05128	SCREW, turn signal lamp front	2
14	61720HP8900	TUBE COMP, reart turnsignal RH	1
15	61730HP8900	TUBE COMP, resrt turn signal LH	1
16	07120-08208	BOLT, grip rear	4
17	02142-05128	SCREW, turn signal lamp rear	2
18	43980HP890003P	GRIP COMP, rear	1
19	35970-24D63	REFLEX REFLECTOR ASS'Y, rear	2
20	08316-26055	NUT, reflex reflector	2
21	43510HP8900PAM	FOOT REST, front R	1
22	43520HP8900PAM	FOOT REST, front L	1
23	43620HP8900	BRAKET COMP, pillion footrest RH	1
24	43630HP8900	BRAKET COMP, pillion footrest LH	1
25	01547-06408	BOLT, footrest guard & pillion footrest	2

Estel

FIG.37

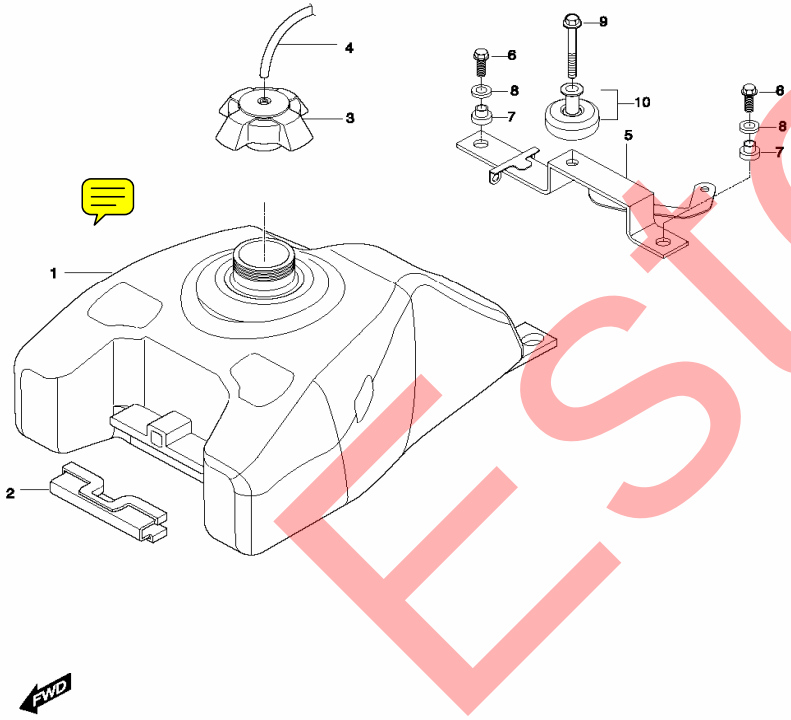

ITEM	DESCRIPTION	P/N	Q"TY
1	44110HP8900PAH	TANK ASS'Y, fuel(without fuel gaug	1
2	44511HP8900	CUSHION, fuel tank front	1
3	44200HP8900	CAP COMP, fuel tank	1
4	09343-05052	HOSE, fuel tank bredther	1
5	45118HP8900	PLATE, seat front hook NO.1	1
6	01107-06256	BOLT, fuel tank	2
7	09320H10039	CUSHION, fuel tank NO.1	2
8	09180H06066	SPACER, fuel tank	2
9	01517-08508	BOLT, seat front hook plate	1
10	45220HP8900	HOOK COMP, seat	1

Estelar

38 SIDE COVER

<< BACK TO INDEX

FIG. 38

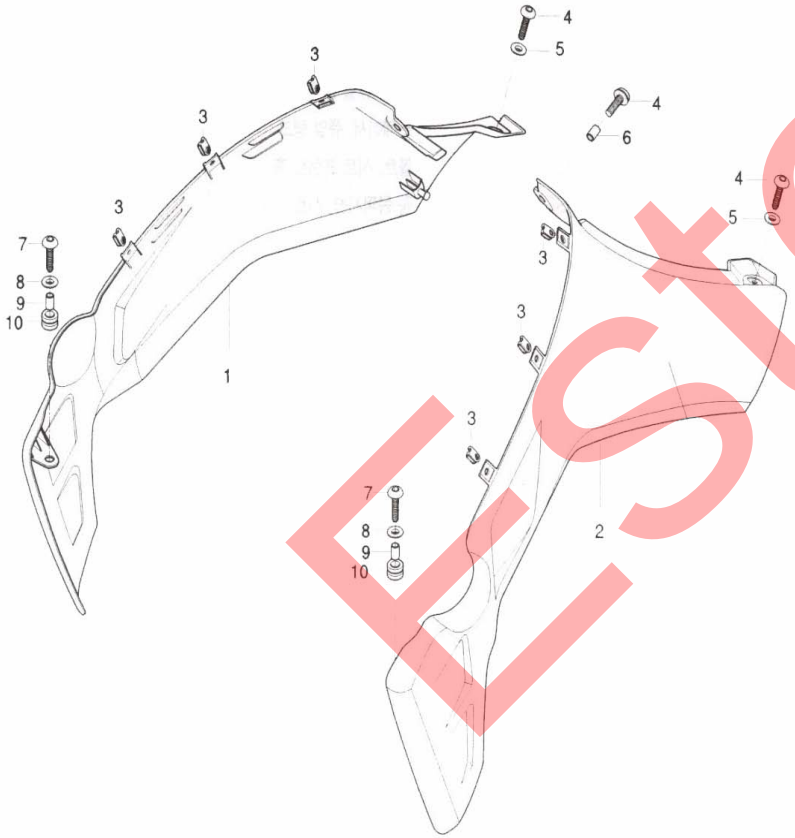

ITEM	DESCRIPTION	P/N	Q"TY
1	47111HP89000GO	COVER, side R	1
2	47211HP89000GO	COVER, side L	1
3	09148H05029	NUT, side cover & front fender	6
4	09106H06208	SCREW, side cover	1
5	09160-06060	WASHER, side cover	1
6	09180-06084	SPACER, side cover	1
7	09119H06208	SCREW, side cover & frame	2
8	09160-06060	WASHER, side cover	2
9	09180-06030	SPACER, side cover & side cover BRF	2
10	09320-09016	CUSHION, side cover &side cover BF	2
11	68124HS8950	TAPE, side front fender R	1
12	68126HS8950	TAPE, side front fender L	1

Estelar

39 FRONT FENDER

FIG. 39

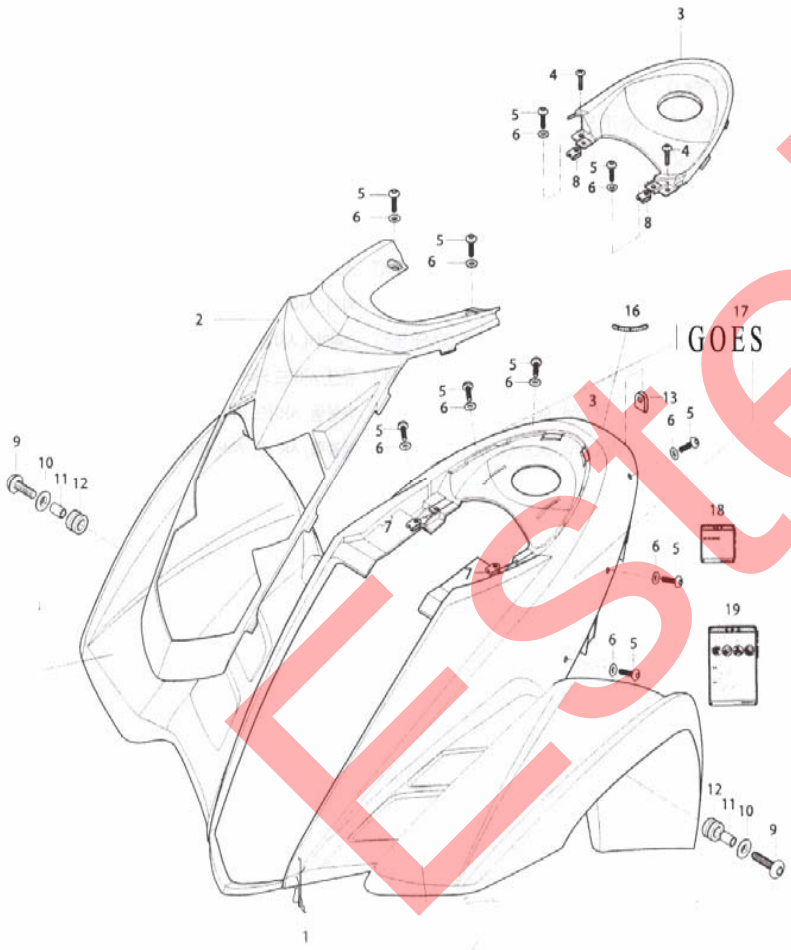

ITEM	DESCRIPTION	P/N	Q"TY
1	53111HP8950GO	FENDER, front	1
2	53118HP8900	FENDER, center front	1
3	53119HP8950	FENDER, center rear	1
4	09320-08028	CUSHION, front fender & cener front	1
5	09106H05150	SCREW, front fender & side cover	6
6	09169h05078	WASHER, front fender & side cover	6
7	02142-05125	SCREW, front fender center rear	2
8	09148-05019	NUT, front fender center	2
9	09148H05029	NUT, front fender center rear	2
10	09106H06150	BOLT, front fender & frame	2
11	09106H06078	WASHER, front fender & frame	2
12	09106H06200	BOLT, front fender brace & fender	2
13	09160-06006	WASHER, front fender brace & fender	2
14	09180-06030	SPACER, front fender brace & fender	2
15	09320-09016	CUSHION, front fender brace & fende	2
16	09148H05029	NUT, front fender rear	1
17	68120HS8950	EMBLEM, GOES	2

Estel

<< BACK TO INDEX

FIG 40

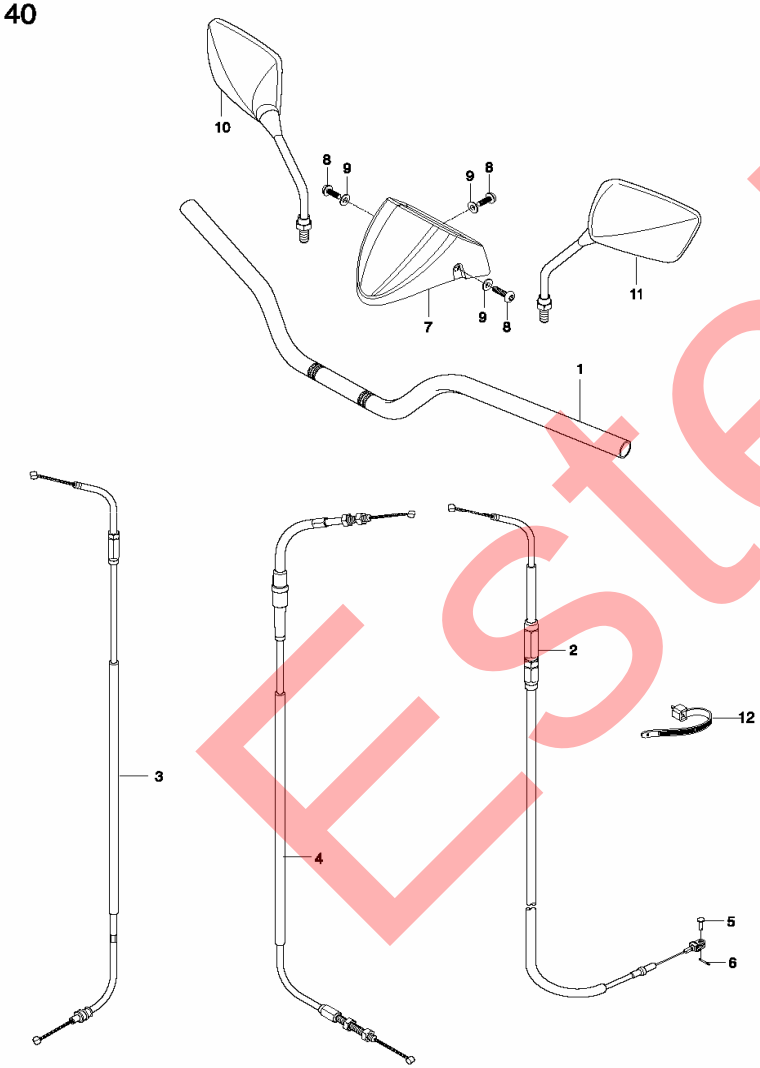

ITEM	DESCRIPTION	P/N	Q"TY
1	56110HP8900	HANDLEBAR COMP	1
2	58300HP8900	CABLE ASS'Y, throttle	1
3	58800HP8900	CABLE ASS'Y, parking	1
4	58200HP8900	CABLE ASS'Y, clutch	1
5	09200-06004	PIN, clutch cable	1
6	04111-20158	COTTER PIN, clutch cable	1
7	56171HP8900	COVER, steering head	1
8	09106H05150	SCREW, steering head cover	2
9	09169H05078	WASHER, steering head cover	3
10	56500HM5450	MIRROR ASS'Y, rear view R	1
11	56600HM5450	MIRROR ASS'Y, rear view L	1
11-1	56501HM5450	MIRROR SET(R/no.10+11)	1
12	09407-14403	CLAMP, wiring harness	1

Estel

41 HANDLE SWITCH

FIG 41

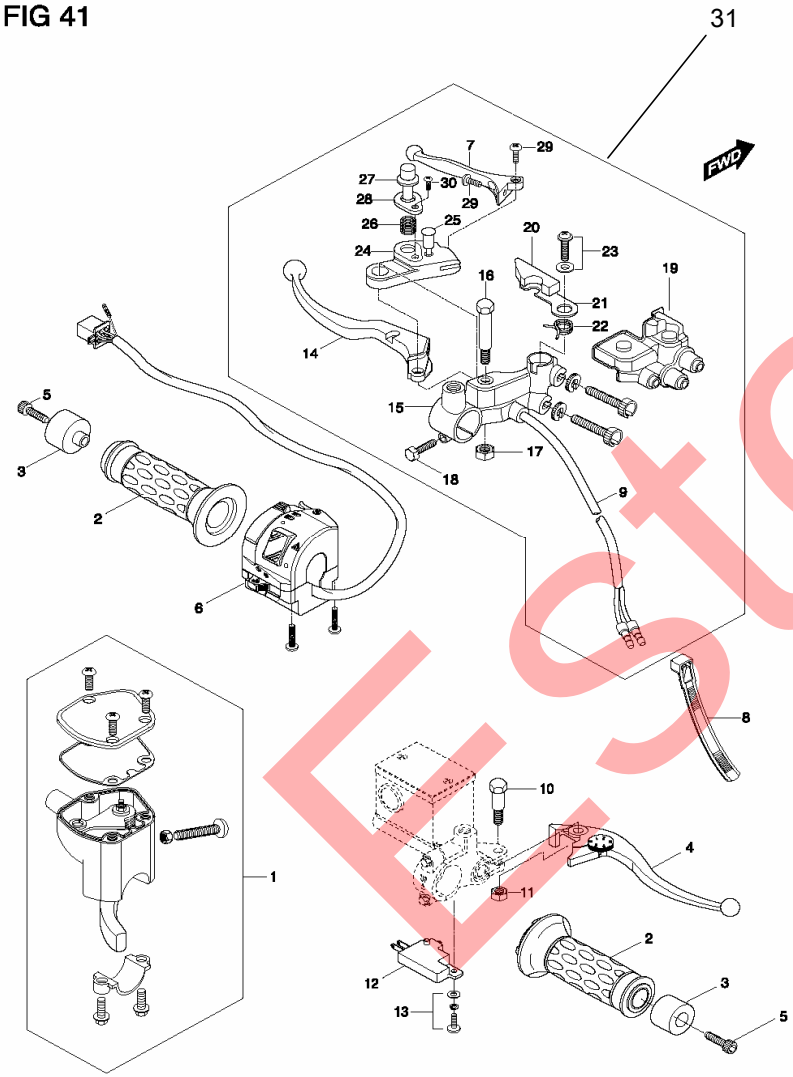

ITEM	DESCRIPTION	P/N	Q"TY
1	57100HP8900	CASE ASSY, throttle	1
2	57211HG5800	GRIP, handle	2
3	56271H93B010BF	BALANCER, handlebar	2
4	57300HN9102	LEVER ASS'Y, brake	1
5	07110-08255	BOLT, handle balancer	2
6	37400HP8900	SWITCH ASSY, handle LH	1
7	57351HP8900	LEVER, secondary brake	1
8	09407-20406	CLAMP	2
9	57460HP8900	SWITCH ASS'Y, clutch	1
10	57431HN9101	BOLT, brake lever pivot	1
11	08319-21068	NUT, brake lever pivot	1
12	57460-17C00	SWITCH ASS'Y STOP	1
13	02112-74108	SCREW, stop switch	1
14	57620HP8900	LEVER COMP, clutch	1
15	57511HP8900	HOLDER, clutch lever	1
16	57531HP8900	BOLT, clutch lever pivot	1
17	08319-21068	NUT, clutch lever pivot	1
18	57451H93B00	BOLT, clutch lever holder	1
19	57661HP8900	COVER, clutch lever	1
20	57811HP8900	KNOB, parking brake lever	1
21	57812HP8900	LEVER, parking brake	1
22	09448H15003	SPRING	1
23	02112-95105	SCREW	1
24	57820HP8900	ARM COMP, parking brake	1
25	57825HP8900	CAP, PIN	1
26	09440H14011	SPRING	1
27	57823HP8900	PIN, parking brake	1
28	57824HP8900	COVER, parking brake spring	1
29	02112-05125	BOLT	2
30	02112-43085	SCREW	1
31	57500HP8900	LEVER ASSY	1

Estel

42 REAR FENDER

<< BACK TO INDEX

FIG. 42

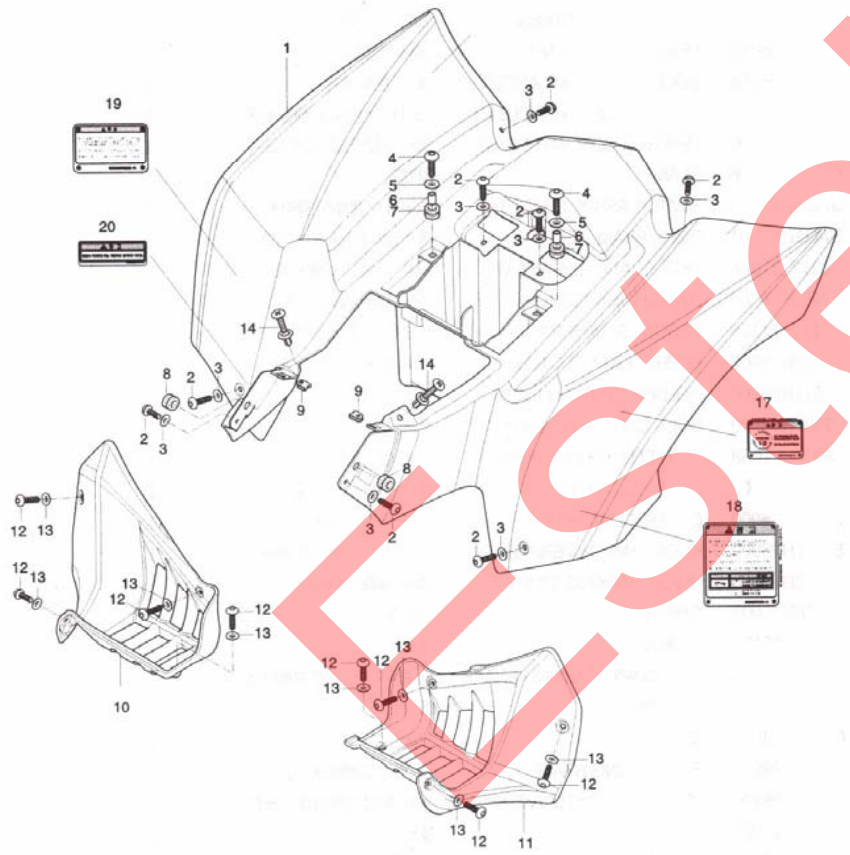

ITEM	DESCRIPTION	P/N	Q"TY
1	63111HP8900303	FENDER, rear	1
2	09106H06150	BOLT, rear fender & rear turnsignal	2
3	09169H06078	WASHER, rear fender & rear turn sign	2
4	09106H06200	BOTL, front fender brace & fender	2
5	09160-06006	WASHER, front fender brace & fender	2
6	09180-06030	SPACER, front fender brace & fender	2
7	09320-09016	CUSHION, front fender brace & fende	2
8	09320-08018	CUSHION, rear fender & side cover	2
9	09148H05029	NUT, rear fender & side cover	2
10	63331HP8900	MUDGUARD, footrest RH	1
11	63341HP8900	MUDGUARD, footrest LH	1
12	09106H06150	SCREW, footrest mudguard R/L	8
13	09169H06078	WASHER, footrest mudguard R/L	8
14	09407-08307	SCRIVET, rear fender & rear frame fr	2
15	68144HS8950	TAPE, rear fender R	1
16	68146HS8950	TAPE, rear fender L	1
17	57 GOES LABEL		
18			
19			
20			

Listed

43 SUSPENSION ARM RH

FIG. 43

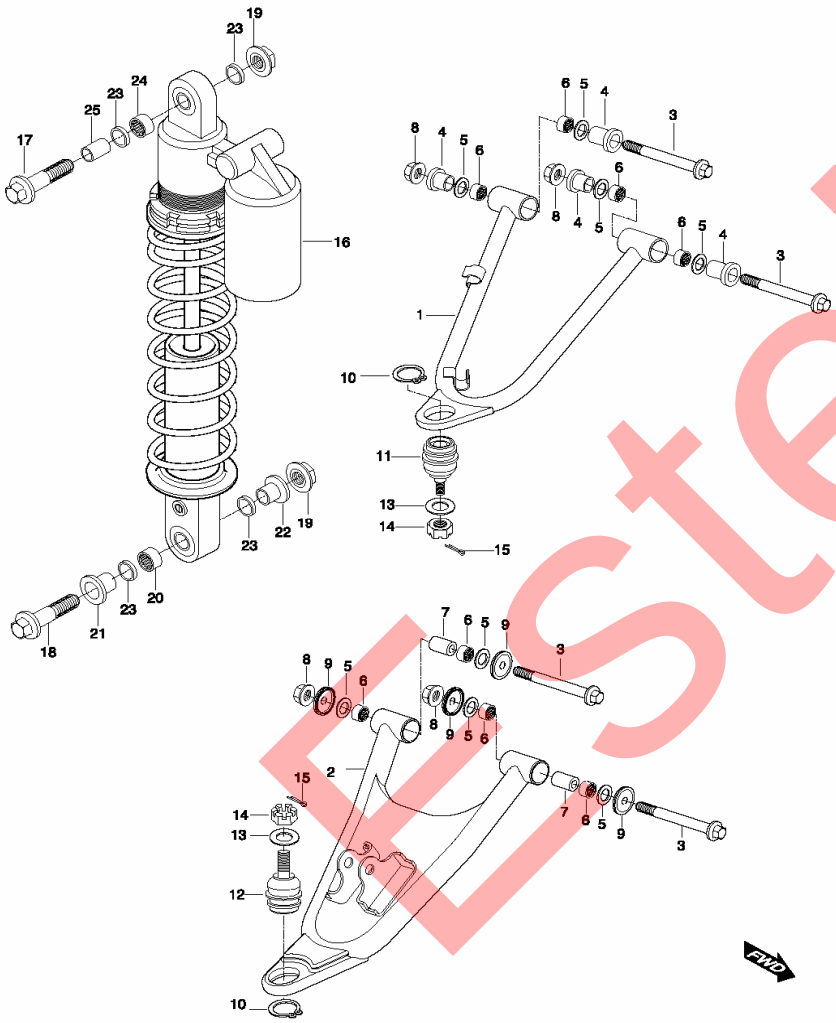

ITEM	DESCRIPTION	P/N	Q"TY
1	52410HP8900HPA	ARM COMP, susppension upper R	1
2	52450HP8900HPA	ARM COMP, suspension lower R	1
3	09103H10758	BOLT, suspension arm R	4
4	52455HP8900	SPACER, suspensing upper arm	4
5	09285H17001	SEAL, suspension arm	8
6	09263H17007	BEARING, suspension arm	8
7	52456HP8900	SPACER, suspension lower arm	2
8	08319-31108	NUT, suspension arm R	4
9	09284H28003	DUST CAP, suspension lower arm R	4
10	08331-31329	CIRCLIP, knuckle steering end	2
11	51210HP8900	ENG, knuckle steering upper	1
12	51220HP8900	ENG, knuckle steering lower	1
13	09160-12011	WASHER, knuchle steering end	2
14	08314-31128	NUT, knuckle steering end	2
15	04111-20206	COTTER PIN, knouckle steering end'	2
16	52100HP8900	ABSORBER ASSY(ORANGE), front	2
17	61181-02C00	BOLT, front shock absorber ass'y uppe	1
18	09103H10101	BOLT, front shock absorber ass'y uppe	1
19	08319-31108	NUT, front shock absorber ass'y R	2
20	09263H16002	BEARING, front shock absorber lower	1
21	62684HP8900	SPACER, ft shock absorber lower NO	1
22	62685HP8900	SPACER, ft shock absorber lower NO2	1
23	09284H16223	SEAL, ft shock absorber upper R	4
24	09263H16002	BEARING, ft shock absorber upper R	1
25	62686HP8900	SPACER, ft shockabsorber upper R	1

Estelar

<< BACK TO INDEX

FIG 44

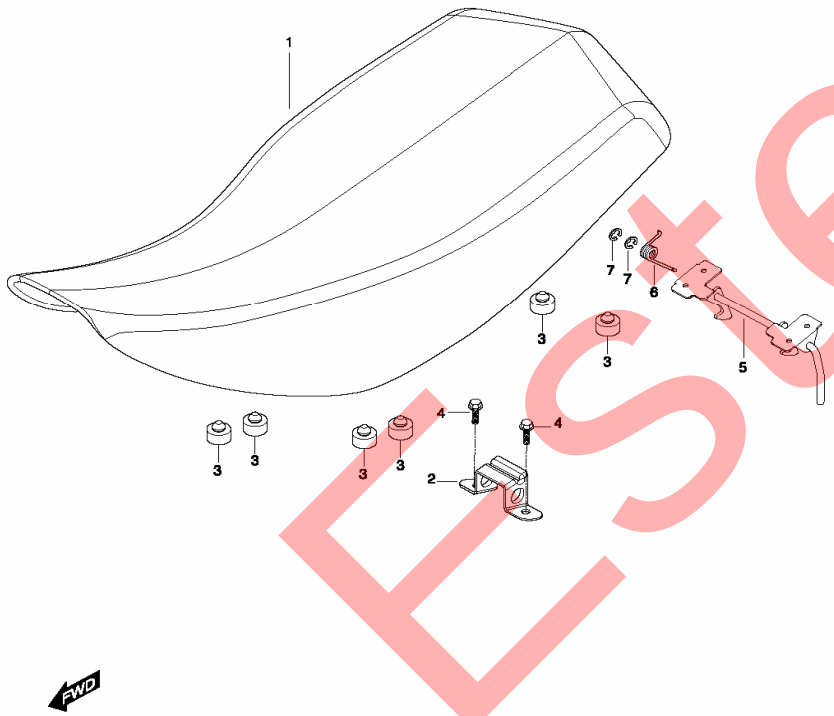

ITEM	DESCRIPTION	P/N	Q"TY
1	45100HP8950L05	SEAT SET	1
2	45119-02C00	PLATE, seat front hook	1
3	09321-100B2	CUSHION, seat set	6
4	01107-06256	BOLT, seat front hook plate	2
5	45210HP8900	CLAMP COM, seat	1
6	45135-243A2	SPRING, seat set	1
7	08332-11066	E-RING, seat set	2

Estelar

45 KNUCKLE STEERING

FIG. 45

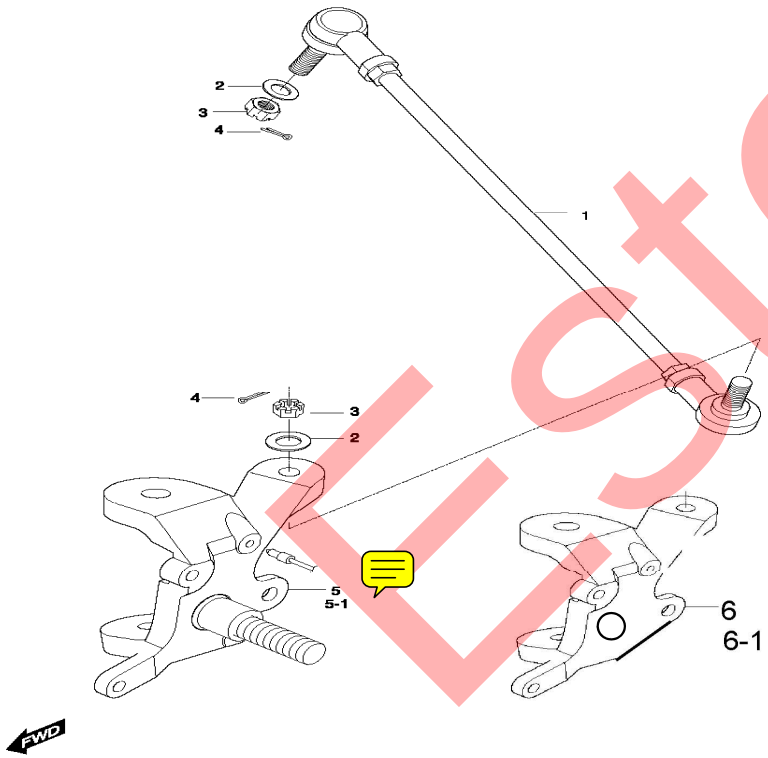

ITEM	DESCRIPTION	P/N	Q"TY
1	51091HP8900	TIE ROD, steering	2
2	08322-21108	WASHER, suspension upper arm R	4
3	08314-40103	NUT, rod end	4
4	04111-20206	COTTER PIN, rod end	4
5	51232HP8900HPA	KNUCKLE COMP, steering L	1
5-1	51231HP8900HPA	KNUCKLE COMP, steering R	1
6	51240HP8900	KNUCKLE , steering L	1
6-1	51231HP8900	KNUCKLE, steering R	1

Estela

46 STEERING SHAFT

FIG. 46

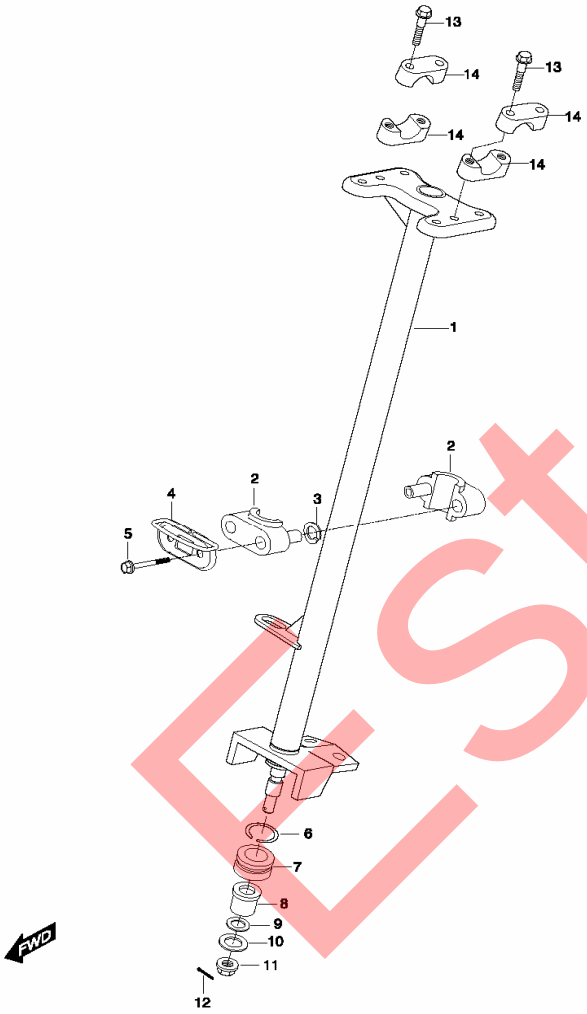

ITEM	DESCRIPTION	P/N	Q"TY
1	51650HP8900	SHAFT COMP, steering	1
2	51670-245A0	HOLDER, steering shaft	2
3	51678-24500	DUST SEAL, steering shaft holder	2
4	51680HP8900	REINFORCEMENT, holder	1
5	09103-081B6	BOLT, steering holder	2
6	09380H30002	SNAP RING, dust seal	1
7	51662-18900	DUST SEAL, steering shaft	1
8	51661-40B00KOR	BUSH, steering shaft lower	1
9	09280-14003	O-RING, steering shaft lower	1
10	09160-10068	WASHER, steering	1
11	08319-31106	NUT, steering shaft	1
12	04111-20206	COTTER PIN, steering	1
13	01234-08556	BOTL, handlebar clamp	4
14	56211-272A0	CLAMP, handlebar	4

Estelar

47 SUSPENSION ARM LH

FIG. 47

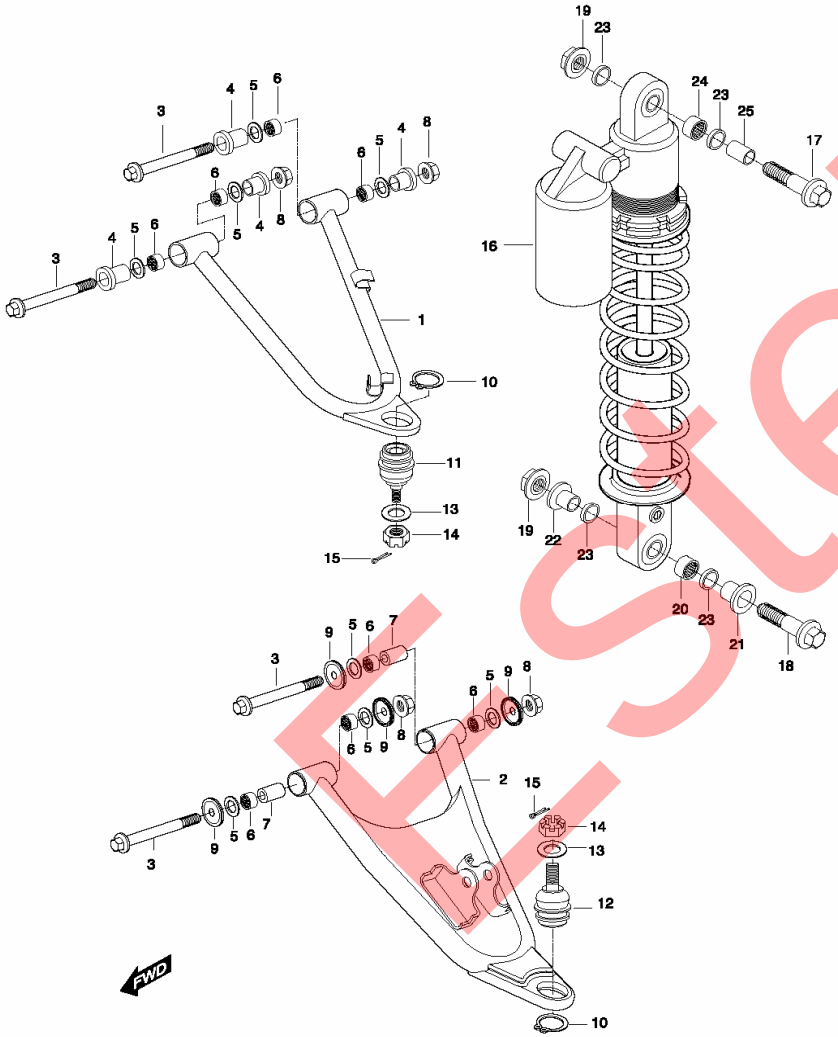

ITEM	DESCRIPTION	P/N	Q"TY
1	52420HP8900HPA	ARM COMP, suspension upper L	1
2	52460HP8900HPA	ARM COMP, suspension lower L	1
3	09103H10758	BOLT, suspension arm L	4
4	52455HP8900	SPACER, suspension upper arm	4
5	09285H17001	SEAL,suspension arm	8
6	09263H17007	BEARING, suspension arm	8
7	52456HP8900	SPACER, suspension lower arm	2
8	08319-31108	NUT, suspension arm L	4
9	09284H28003	DUST CAP, suspension lowerarm L	4
10	08331-31329	CIRCLIP, knuckle steering end	2
11	51210HP8900	END, knuckle steering upper	1
12	51220HP8900	END, knuckle steering lower	1
13	09160-12011	WASHER, knuckle steering end	2
14	08314-31128	NUT, knuckle steering end	2
15	04111-20206	COTTER PIN, knouckle steering end'	2
16	52100HP8900	ABSORBER ASSY, front shock L	1
17	61181-02C10	BOLT, front shock absorber ass'y uppe	1
18	09103H10101	BOLT, front shock absorber ass'y lowe	1
19	08319-31108	NUT, front shock absorber ass'y L	2
20	09263H16002	BEARING, ft shock absorber lower L	1
21	62684HP8900	SPACER, ft shock absorber upper NO	1
22	62685HP8900	SPACER, ft shock absorber upper NO2	1
23	09284H16223	SEAL, ft shkck absorber upper L	4
24	09263H16002	BEARING, ft shock absorber upper L	1
25	62686HP8900	SPACER, ft shock absorber lower L	1

Estelar

<< BACK TO INDEX

48 FRONT WHEEL

FIG. 48

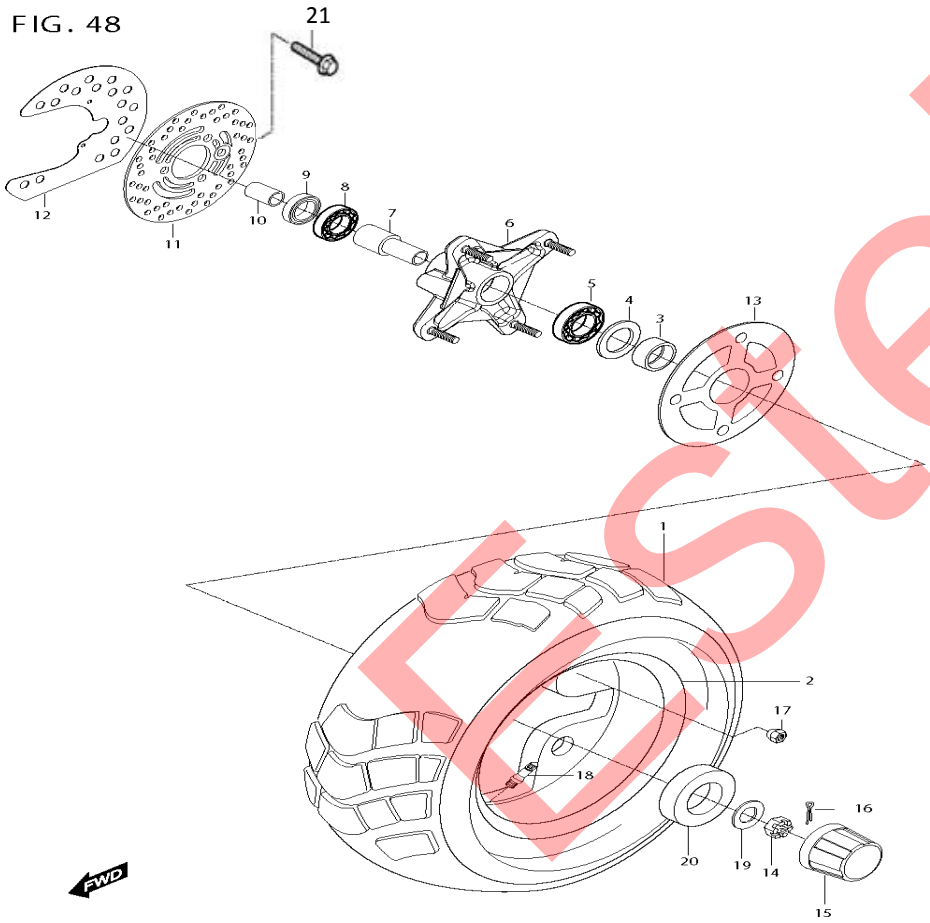

ITEM	DESCRIPTION	P/N	Q"TY
0	55310SP8950HPA	TIRE+WHEEL RH ASS'Y,FT(175/75-10	1
0-1	55410SP8950HPA	TIRE+WHEEL LH ASS'Y,FT(175/75-10	1
1	55100HP8950	TIRE COMP,FT(175/75-10)	2
2	54150HP8900	WHEEL COMP, front	2
3	09180H20102	SPACER, front axle inner	2
4	09284-26002	SEAL, front hub r/l inner	2
5	08130-60037	BEARING, front hub R/l inner	2
6	54110HP8900HPA	HUB ASS'Y, front	2
7	54733HP8900	RETAINER, front wheel	2
8	08130-60047	BEARING, front hub R/L outer	2
9	09284-21001	SEAL, front hub R/L outer	2
10	09180H14012	SPACER, front axle outer	2
11	59211HP8900	DISK, front brake	2
12	59214HP8900	COVER, front hub inner	2
13	54138HP8900	PLATE, front hub	2
14	08314-40146	NUT, front axle end	2
15	54725HK3101	CAP, wheel center	2
16	04111-30258	PIN, front axle end	2
17	09159H10098	NUT, wheel	8
18	55220-29C20	VALVE, pressure control	2
19	09164H18002	WASHER, front axle end	2
20	64725HP8900	HOLDER, front center cap	2
21	59421-03A01	BOLT, front disck	4

Estela

49 FRONT CALIPER

FIG.49

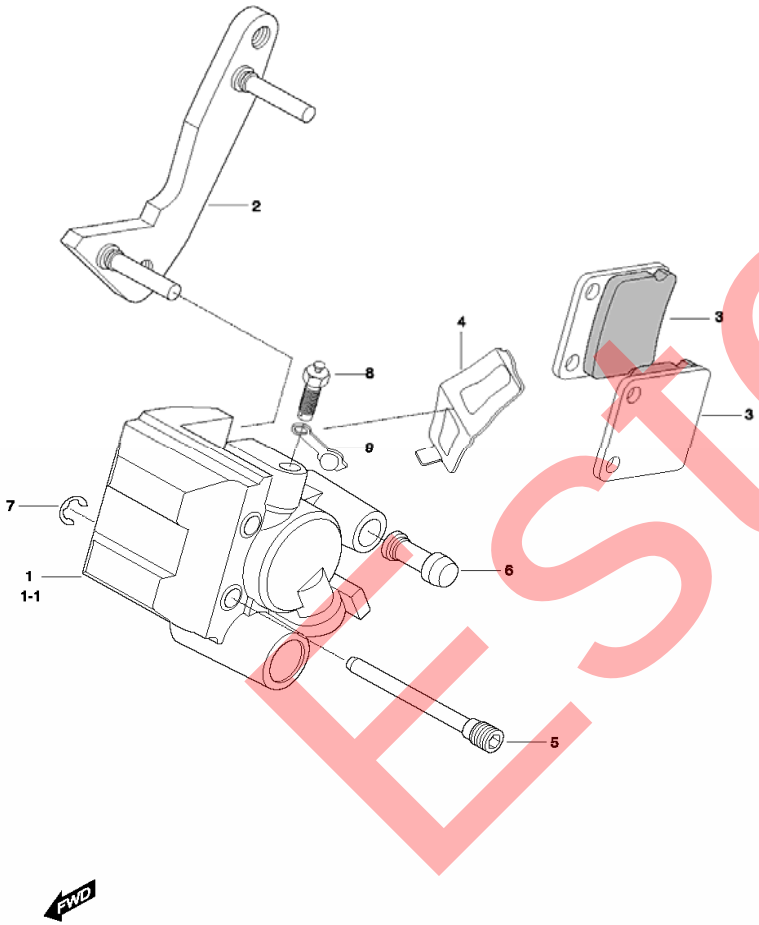

ITEM	DESCRIPTION	P/N	Q"TY
1	59400HP8900	CALIPER ASS'Y R	1
1-1	59300HP8900	CALIPER ASS'Y L	1
2	59350HP8900	CALIPER CARRIER	2
3	59301HP8900	PAD COMP, caliper	4
4	59315HP8900	SPRING	2
5	59302HP8900	AXLE CALIPER PAD	4
6	59313HP8900	INSULATOR CALIPER	2
7	59303HP8900	E-RING	4
8	59121HP8900	BREATHER	2
9	59122HP8900	CAP	2

Estelar

50 BRAKE HOSE

FIG.50

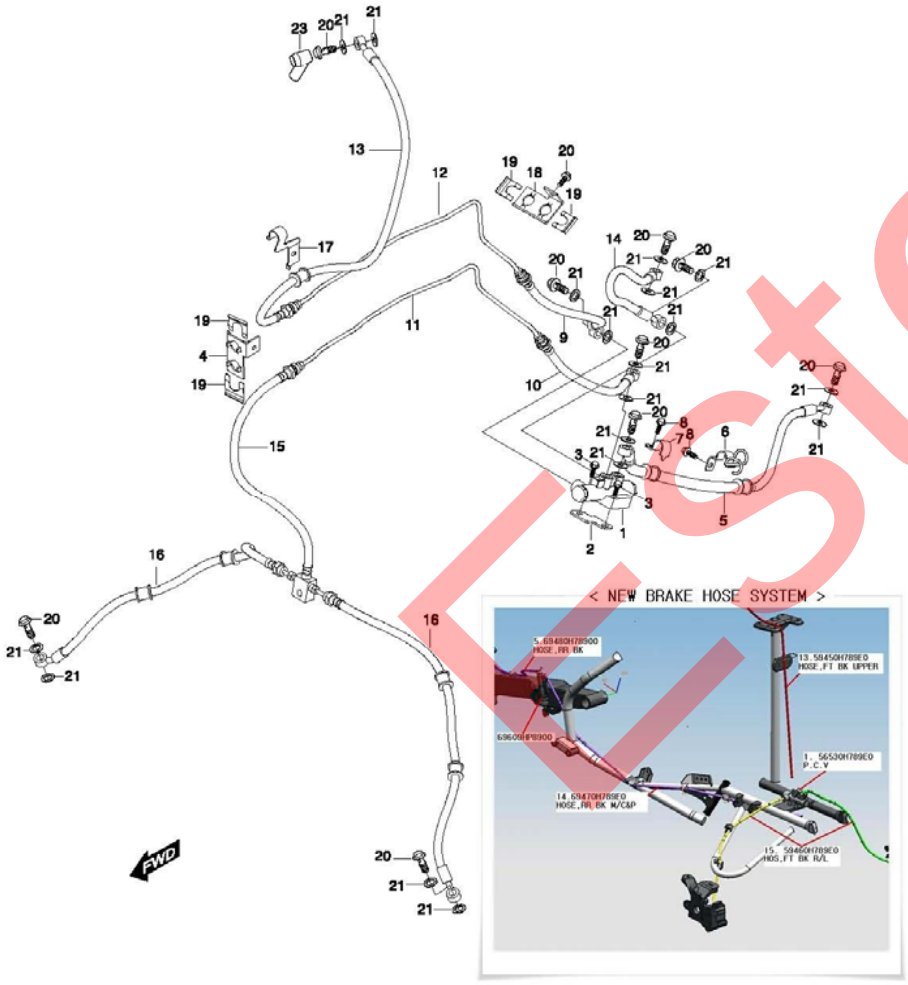

ITEM	DESCRIPTION	P/N	Q"TY	REMARKS
1	56530HP8900	VALVE ASS'Y, pressure control	1	
1-N	56530HP89E0	VALVE ASS'Y, pressure control	1	from Frame n° KM4AL42A981101131
2	56540HP8900	BRACKET COMP, pvc	1	
3	07120-08258	BOLT, pressure control valve ass'y	2	
4	61511HP8900	BRACKET, brake hose ft	1	
5	69480HP8900	HOSE COMP, rr brake caliper	1	
5-N	64980H78900	HOSE COMP, rr brake caliper	1	from Frame n° KM4AL42A981101131
6	61520HP8900	CLAMP COMP, rear brake hose	1	
7	61531HP8900	CLAMP, rear brake hose front	1	
8	01517-06125	BOLT, rr brale hose clamp	2	
9	59480HP8900	HOSE COMP, ft m/cylinder pipe & P.C.V	1	
10	59520HP8900	HOSE COMP, ft m/cylinder pipe & P.C.V	1	
11	59510HP8900	PIPE COMP, ft calliper hose	1	
12	59470HP8900	PIPE COMP, ft m/cylinder hose	1	
13	59490HP8900	HOSE COMP, ft m/cyliner	1	
13-N	59450H789E0	HOSE COMP, ft m/cyliner	1	from Frame n° KM4AL42A981101131
14	69470HP8900	HOSE COMP, rr brake m/c & P.C.V	1	
14-N	69470H789E0	HOSE COMP, rr brake m/c & P.C.V	1	from Frame n° KM4AL42A981101131
15	59460HP8900	HOSE COMP, ft brake center	1	
15-N	59460H789E0	HOSE COMP, ft brake center	1	from Frame n° KM4AL42A981101131
16	59450HP8900	HOSE COMP, ft brake R/L	2	
17	59266HP8900	CLAMP, front brake hose	1	
18	61510HP8900	BRACKET COMP, brake hose	1	
19	09385H13001	CLIP, front brake hose	4	
20	09360-10039	BOLT, front brake master	9	
21	09161-10009	WASHER, brake fluid	18	

Estelar

FIG.51

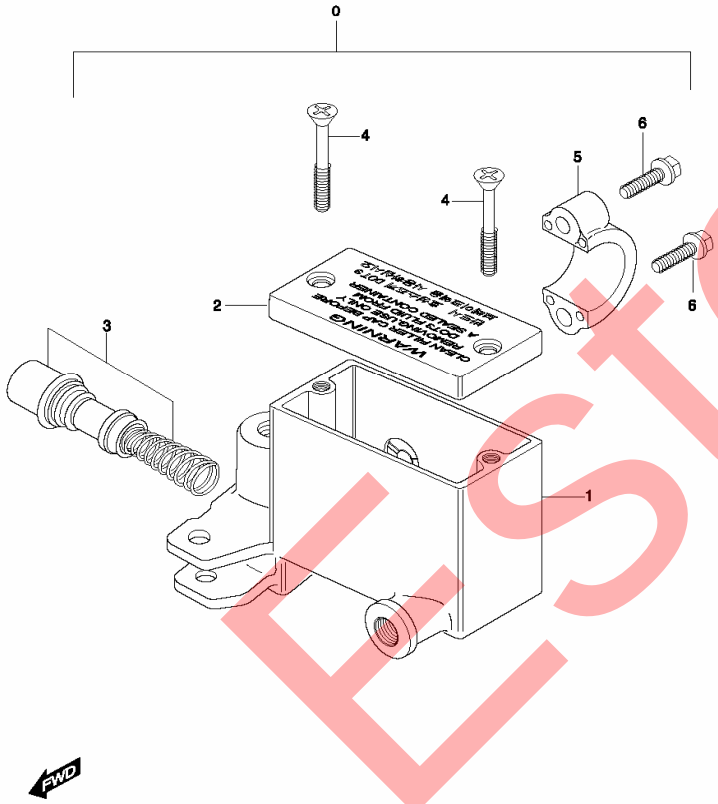

ITEM	DESCRIPTION	P/N	Q"TY
0	59600HP8900	CYLINDER ASSY, front master	1
1	59687HM8162	BODY, master cylinder	1
2	59669-36510	.CAP, reservoir	1
3	59600-35C00	.PISTON, SET	1
4	59691-35C00	.SCREW	2
5	59671-35C00	.HOLDER	1
6	01107-35C00	.BOLT, holder	2
7	59511HP9200	RESERVOIR CAP PLATE	1
8	59667HP9200	DIAPHRAGM	1

Estelar

<< BACK TO INDEX

FIG. 52

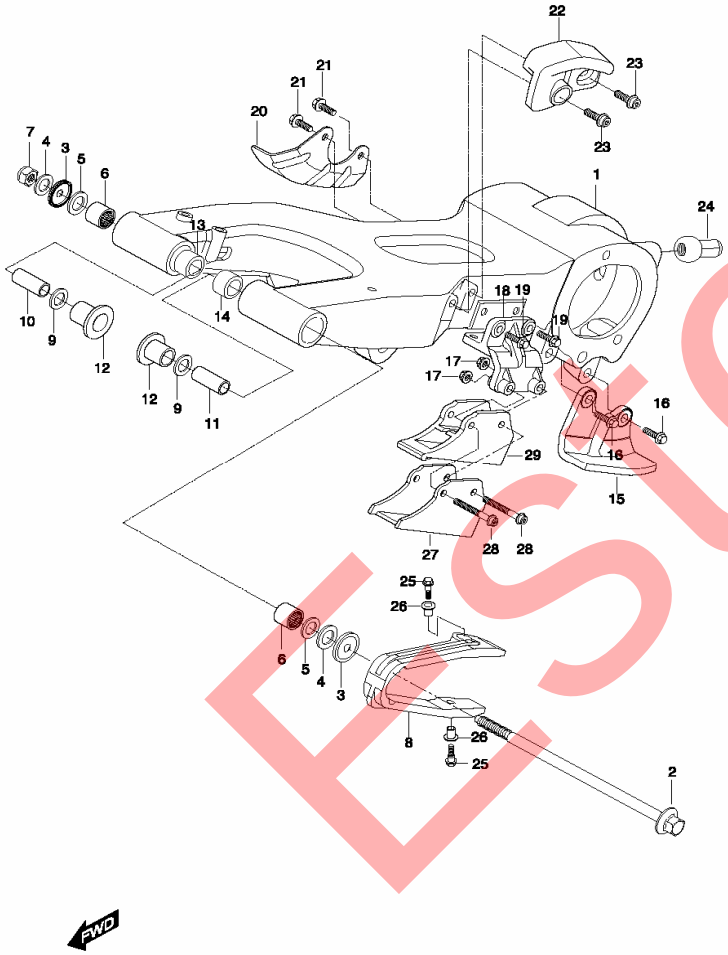

ITEM	DESCRIPTION	P/N	Q"TY
1	61100HP8900HPA	SWINGINGARM ASSY,rear	1
2	61211HP8900	SHAFT, rear swingarm pivot	1
3	09284H38003	DUST CAP, rear swingingarm pivot	2
4	08211-14321	WASHER, rear swingingarm pivot dus	2
5	09285-22001	SEAL, rear swingarmarm pivot bearing	2
6	09263-22017	BEARING, rear swingingarm pivot	2
7	09159H14008	NUT, rear swingingarm pivot	1
8	61273HN9100	BUFFER, chain touch defense	1
9	09285-22001	SEAL, rear swingingarm pivot bearing	2
10	61251HP8900	SPACER, rear swingingarm pivot R	1
11	61252HP8900	SPACER, rear swingingarm pivot L	1
12	61253HP8900	SPACER, rear swingingarm pivot	2
13	61261HP8900	BUSH, rear swingingarm pivot R	1
14	61262HP8900	BUSH, rear swingingarm pivot L	1
15	61390HP8900	GUARD, spoocket	1
16	01517-10306	BOLT, sporocket guard	2
17	08316-16088	NUT, chain guide	2
18	61154HP8900	BRACKET, chain guide	1
19	07120-08608	BOLT, chain guide	2
20	69232HP8900	COVER, rear disk	1
21	01517-10306	BOLT	2
22	61274HP8900	SLIDER, chain touch defense	1
23	07120-08208	BOLT	2
24	61423HP8900	NUT, chain adhuster	1
25	09106H06150	SCREW, chain touch defense buffer	2
26	09169H06011	WASHER, chain touch defense buffer	2
27	61342HP8900	PLATE, chain guide	1
28	07120-08608	BOLT, chain guide	2
29	61341HP8900	GUIDE, chain	1
30	62800HP8900	TOW COMP, TRAINER	1
31	07120-10306	BOLT (M10 X 1.25P)	3

Estelar

<< BACK TO INDEX

53 REAR SHOCK ABSORBER

FIG. 53

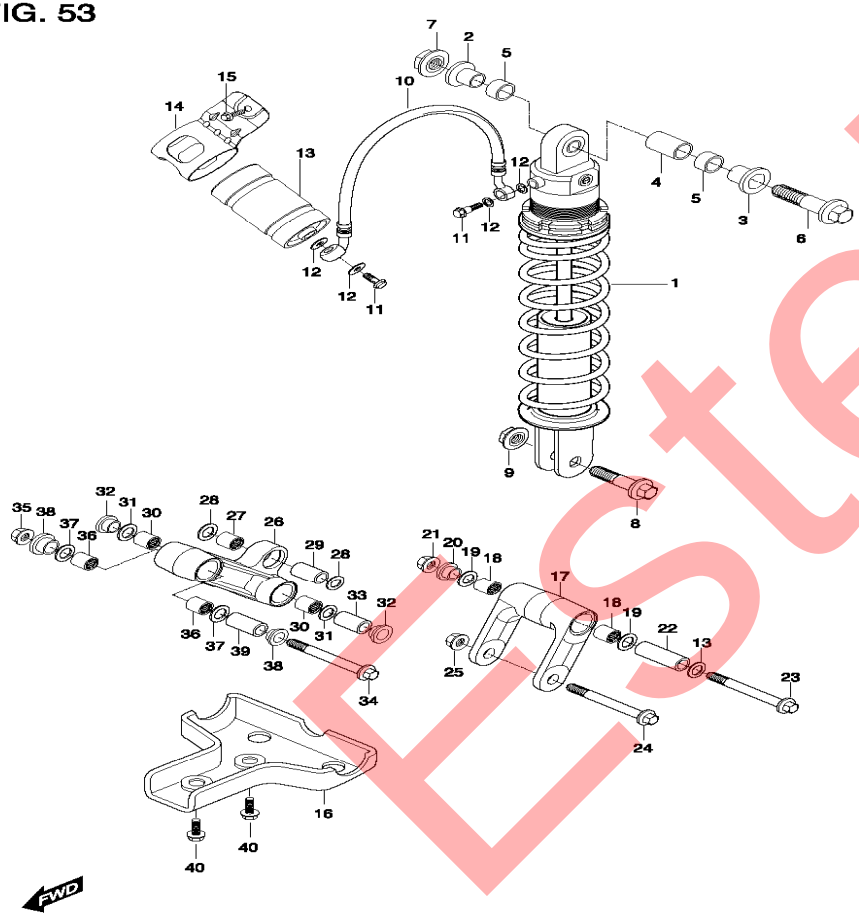

ITEM	DESCRIPTION	P/N	Q"TY
1	62100HP8900	ABSORBER ASS'Y(ORANGE), rear sho	1
2	62684HP8900	SPACER, ft shock absorber upper NO1	1
3	62685HP8900	SPACER, ft shock absorber upper NO2	1
4	09263H16002	BEARING, ft shock absorber upper	1
5	09284H16223	SEAL, ft shock absorber upper	2
6	09103H10230	BOLT, rear shock absorber upper	1
7	08319-31108	NUT, rear shock absorber upper	1
8	09103H10101	BOLT, rear shock absorber lower	1
9	08319-31108	NUT, rear shock absorber upper	1
10	62960HP8900	HOSE COMP, rear shock absorber	1
11	09360-10039	BOLT, brake hose	2
12	09161-10005	WASHER, brake hose	4
13	61250HP8900	RESERVIOR TANK	1
14	62920HP8900	PLATE, rr shock absorber reservior tank	1
15	01517-06166	BOLT, rr shock absorber reservior tank pl	1
16	68350HP8900	COVER, rear cushion lever	1
17	62612HP8900HPA	ROD ASS'Y, rear cushion	1
18	09263-20061	BEARING, rear cushion lever	2
19	09284H20001	SEAL, rear cushion lever	2
20	09180H14013	SPACER, rear cushion	1
21	08319-31128	NUT, rear cushion lever front	1
22	09180H14014	SPACER, rear cushion lever front	1
23	09103H14506	BOLT, rear cushion lever	1
24	09103H14076	BOLT, rear cushion lever rear	1
25	08319-31128	NUT, rear cushion lever rear	1
26	62611HP8900HPA	LEVER REAR ASS'Y, rear cushion	1
27	09263H20004	BEARING, rear cushion lever	1
28	09284H20001	SEAL, rear cushion lever	2
29	09180H10004	SPACER, rear shock absorber lower	1

Estela

53 REAR SHOCK ABSORBER

FIG. 53

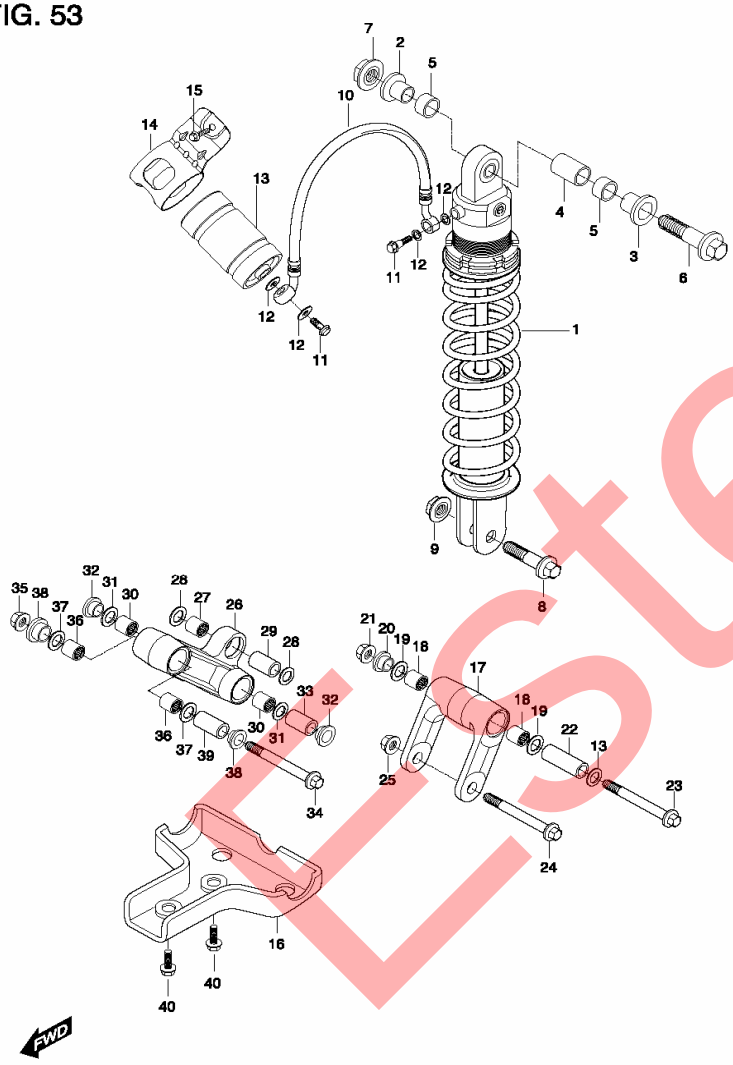

ITEM	DESCRIPTION	P/N	Q"TY
30	09263-20061	BEARING, rear cushion lever	2
31	09284H20001	SEAL, rear cushion lever	2
32	09180H14013	SPACER, rear cushion	2
33	09180H14014	SPACER, rear cushion lever front	1
34	09103H14756	BOLT, rear cushion lever	1
35	08319-31128	NUT, rear cushion lever front	1
36	09263-20061	BEARING, rear cushion lever	2
37	09284H20001	SEAL, rear cushion lever	2
38	09180H14013	SPACER, rear cushion	2
39	09180H14011	SPACER, rear cushion lever rear	1
40	09106H06150	BOLT, rear cushion lever cover	2

Estelar

<< BACK TO INDEX

54-1 AXLE REAR

FIG. 54

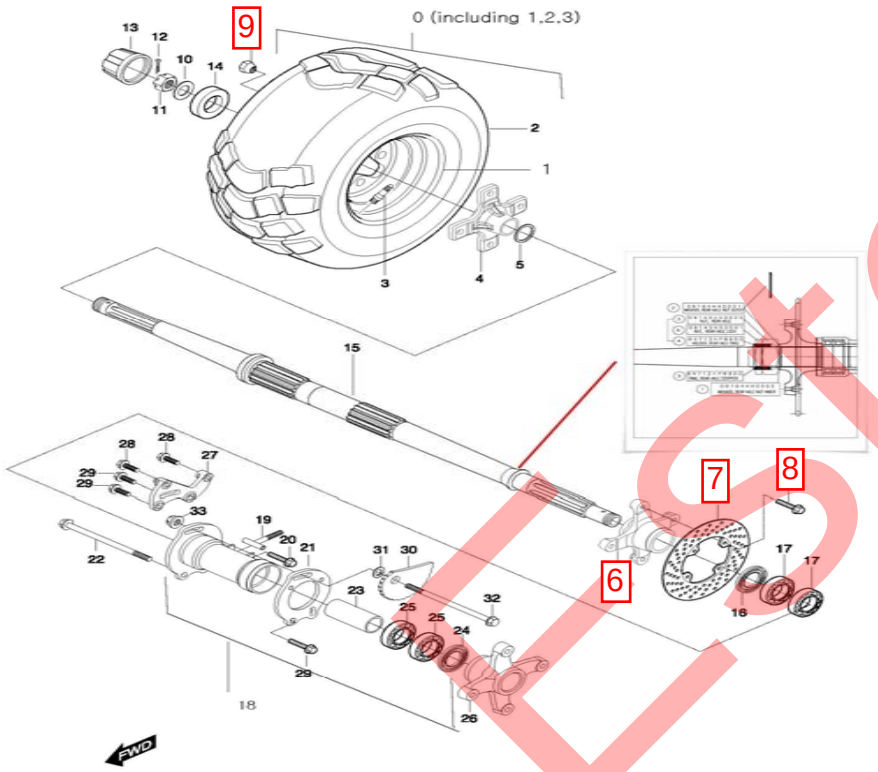

ITEM	DESCRIPTION	P/N	Q"TY	
0	65310SP8950HPA	TIRE+WHEEL RH ASS'Y, rear	1	
1	64150HP8900	WHEEL COMP, rear	1	
2	65100HP8950	TIRE COMP, rear	1	
3	55220-29C20	VALVE, pressure control	1	
4	64110HP8900HPA	HUB COMP, rear	1	
5	09180H44001	SPACER, rear axle R	1	
6	69221HP8900	FLANGE, rear disk	1	
7	69211HP8900	DISK, rear brake	1	
8	59421-03A01	BOLT, rr disk flange	4	
9	09159H10098	NUT, rear wheel	4	
10	09164H18001	WASHER, rear axle	1	
11	09141-18008	NUT, rear axle end	1	
12	04111-40328	COTTER PIN REAR HUB	1	
13	54725HK3101	CAP, wheel center	1	
14	64726HP8900	HOLDER, front center cap	1	
15	64711HP8901	AXLE, rear	1	from frame n° KM4AL42A981101131
15-1	09164H40002	WASHER, rear axle nut inner	1	connected with part n° 15
15-2	09164H40001	WASHER, rear axle nut outer	1	connected with part n° 15
15-3	09140H50025	NUT, rear axle	1	connected with part n° 15
15-4	64713HP8900	HOLDER, rear axle ring	1	connected with part n° 15
15-5	64712HP8900	RING, rear axle stopper	1	connected with part n° 15
15-6	09140H50001	NUT, rear axle lock	1	connected with part n° 15
16	09283-50006	SEAL, rear axle	1	
17	08130-60087	BEARING, rear axle	2	
18	64720HP8900HPA	HOUSING ASS'Y, rear axle bearing	1	
19	61420HP8900	BOLT COMP, chain adjuster	1	
20	43919HP8900	BOLT, chain adjuster	1	
21	64750HP890003P	PLATER, housing L	1	
22	09103H12056	BOTL, housing	1	
23	64731HP8900	SPACER, rear axle bearing	1	
24	09283-50006	SEAL, rear axle	1	
25	08130-60087	BEARING, rear axle	2	
26	64611HP8900HPA	FLANGE ASS'Y, sprocket mounting	1	
27	69341HP8900	CARRIER, caliper	1	
28	07120-08258	CALIPER ASSY REAR BOLT(M8 X 1.2	2	

54-2 AXLE REAR

FIG. 54

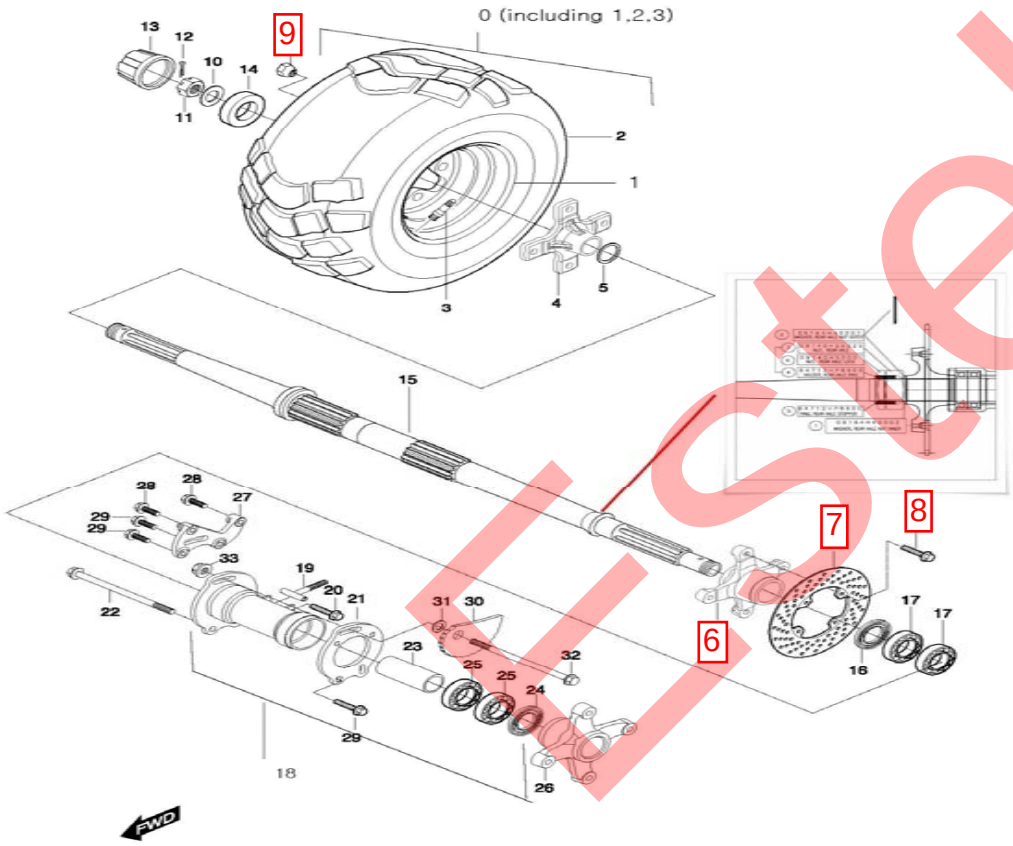

ITEM	DESCRIPTION	P/N	Q"TY
29	07120-10306	BOLT(M10 X 1.25P)	4
30	64755HP8900	STAY, housing	1
31	08322-21108	WASHER, stay housing	2
32	09103H10122	BOLT, rr axle housing & plate No.2	1
33	08316-26108	NUT, rr axle housing & plate No.2	1

Estela

55 REAR WHEEL LH

FIG. 55

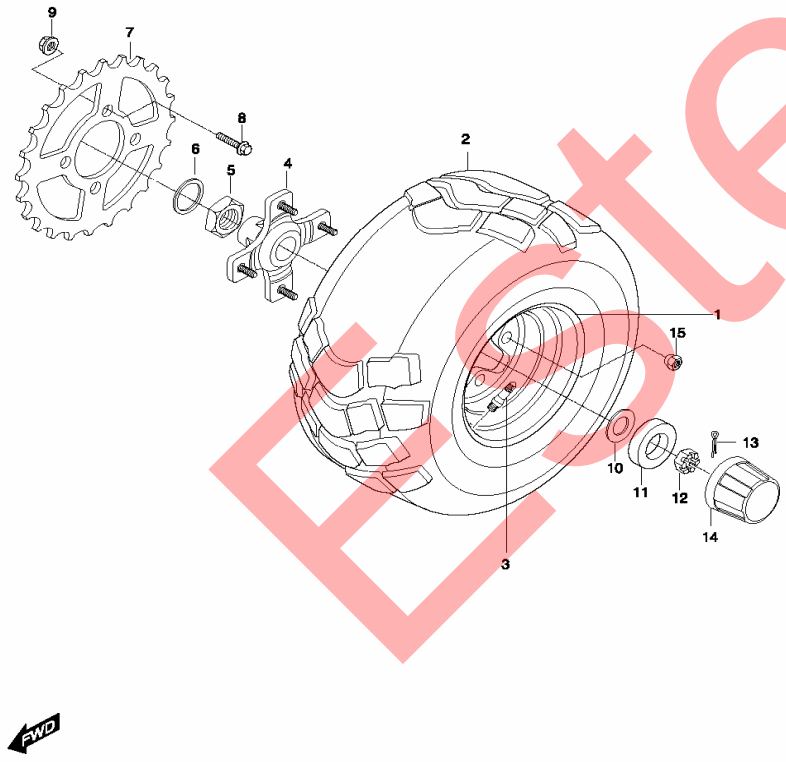

ITEM	DESCRIPTION	P/N	Q"TY
0	65410SP8950HPA	TIRE+WHEEL LH ASS'Y, rear	1
1	64150HP8900	WHEEL COMP, rear	1
2	65100HP8950	TIRE COMP, rear	1
3	55220-29C20	VALVE, pressure control	1
4	09180H44001	SPACER, rear axle L	1
5	09140H36103	NUT, axle No.1	1
6	09140H36163	NUT, axle No.2	1
7	64511HP8900	SPROCKET, rear(44T)	1
8	09106H08308	BOLT, sprocket mtg flange	4
9	08319-31088	NUT, sprocket mtg flange	4
10	09160-18009	WASHER, rear axle	1
11	64726HP8900	HOLDER, front center cap	1
12	09141-18008	NUT, rear axle end	1
13	04111-40328	COTTER PIN REAR HUB	1
14	54725HK3101	CAP, wheel center	1
15	09159H10098	NUT, rear wheel	4

Estelar

<< BACK TO INDEX

56 REAR CALIPER

FIG.56

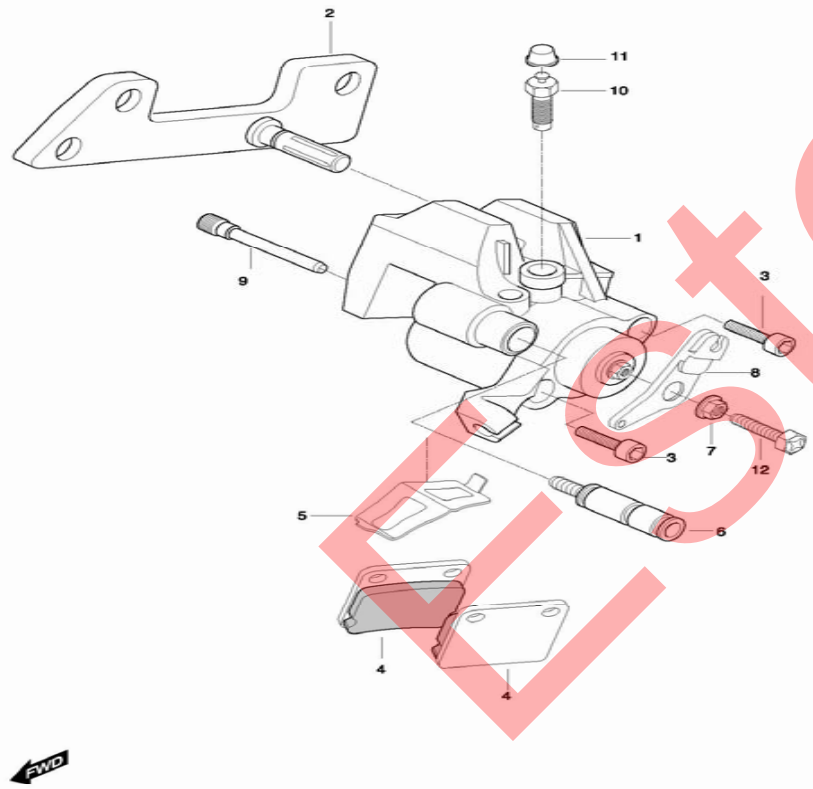

ITEM	DESCRIPTION	P/N	Q"TY
1	69300HP8900	CALIPER ASS'Y, rear	1
2		BRACKET CALIPER	1
3	69330HP8900	BOLTS, connet back cover	2
4	69301HP8900	PAD COMP, caliper SET	1
5	69350HP8900	SPRING PAD	1
6	69340HP8900	PIN BOLT	1
7	69320HP8900	NUT COMP	1
8	69360HP8900	CONNECT PART, tigntwire	1
9	69370HP8900	PIN, hanger	2
10	69381HP8900	BOLT, shaft	1
11	59122HP8900	CAP	1
12	69781HP8900	BOLT, shaft	1

Estel

<< BACK TO INDEX

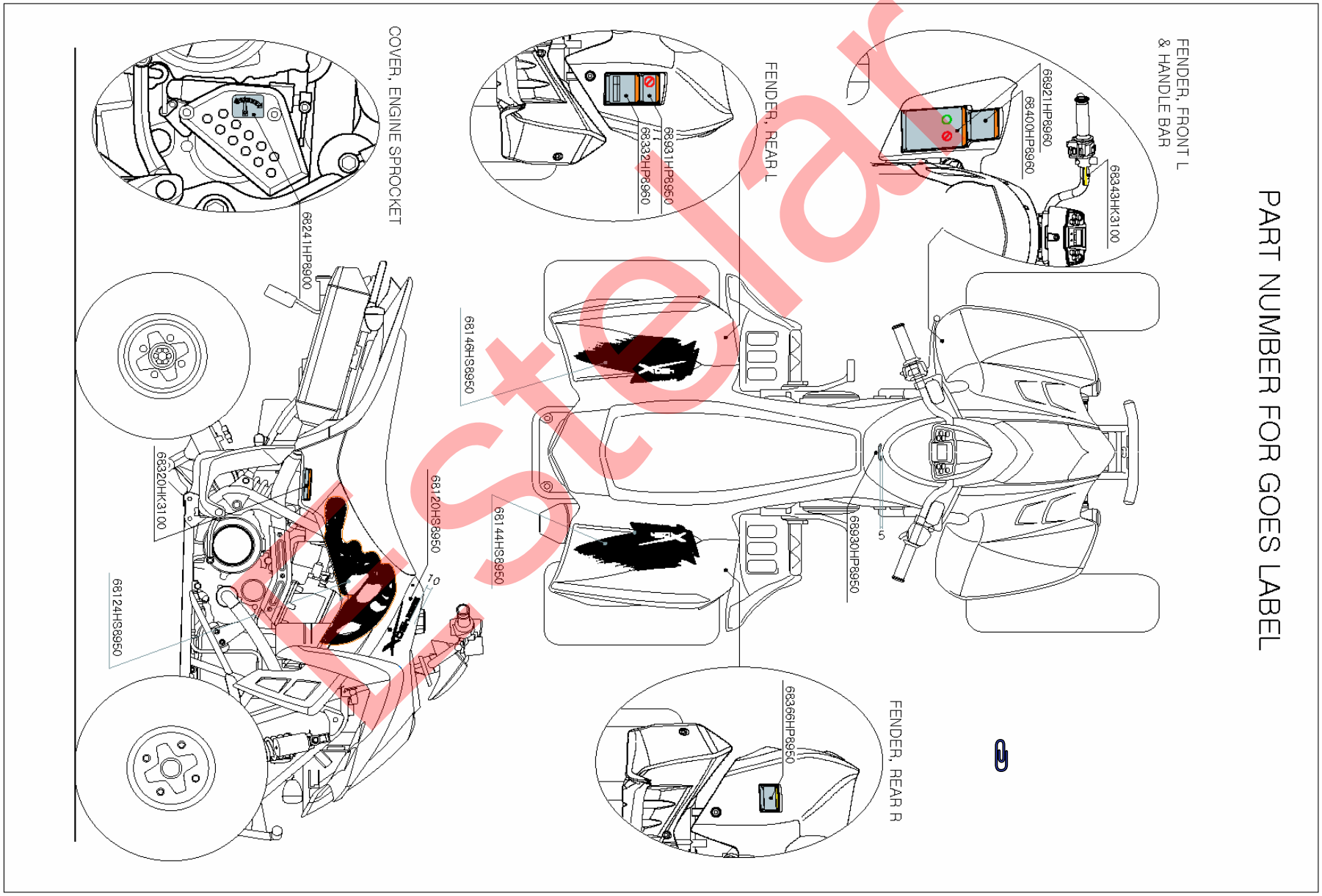

Kstelar

SEARCH

<< BACK TO INDEX

P/N	DESCRIPTION	PAGE	ITEM
01104-06208	BOLT, gear shift lever	23	22
01104-06258	BOLT, oil tank	16	4
01107-05605	sCREW, license lamp	29	10
01107-06106	BOLT, drive shaft oil seal	22	29
01107-06208	BOLT, clutch release arm	21	24
01107-06256	BOLT, fuel tank	37	6
01107-06256	BOLT, seat front hook pla	44	4
01107-10168	BOLT, balancer	9	5
01107-35C00	.BOLT, holder	51	6
01174-05208	BOLT, ignition coil	26	9
01234-08556	BOTL, handlebar clamp	46	13
01421-06258	BOLT, cylinder stud (M6	3	3
01421-08258	BOLT, exhaust pipe stud	14	17
01514-08128	PLUG, oil check	5	14
01514-08128	BOLT, oil drain	16	8
01517-06125	BOLT, rr brale hose clam	50	8
01517-06128	BOLT, water drain	3	6
01517-06128	BOLT, oil galley	5	12
01517-06128	PULG, water drain	18	5
01517-06128	BOLT, engine sprocket	22	12
01517-06128	BOLT, front fender plate	33	11
01517-06165	BOLT, reverse lever ASS	34	4
01517-06166	BOLT, restifier	26	6
01517-06166	BOLT, ignition	26	16
01517-06166	BOLT, front fender brace	33	7
01517-06166	BOLT, rr fender rr & front	33	25
01517-06166	BOLT, rr shock absorber	53	15
01517-06206	BOLT, fuel pump	17	18
01517-08468	BOLT, muffler support	14	12
01517-08508	BOLT, seat front hook pla	37	9
01517-10306	BOLT, footrest R/L	36	3
01517-10306	BOLT, sporocket guard	52	16
01517-10306	BOLT	52	21
01547-06208	BOLT, clutch cover	5	18
01547-06208	BOLT, oil strainer cap	15	21
01547-06258	BOLT, clutch cover outer	5	20
01547-06258	BOLT, water pump case	18	3
01547-06258	BOLT, start motor bracke	24	3
01547-06308	BOLT, clutch cover	5	19
01547-06408	BOLT, magneto cover	6	8
01547-06408	BOLT, footrest guard & p	36	25
01547-06458	BOLT, magneto cover	6	9
01547-06458	BOLT, engine sprocket co	6	13
01547-06658	BOLT, crankcase M6	4	15
01547-06708	BOLT, clutch cover outer	5	21
01547-06708	BOLT, water pump case	18	4
01547-06758	BOLT, crankcase M6	4	7
01547-06858	BOLT, crankcase M6	4	9
02112-00128	SCREW, crank shaft oil s	7	13
02112-05106	SCREW	34	11
02112-05125	BOLT	41	29
02112-06128	SCREW, connecter oil pi	4	11
02112-06128	SCREW, oil return guide	4	13
02112-06128	BOLT, breather oil return	17	33
02112-06128	SCREW, counter shaft be	22	11
02112-06166	BOLT, fuel cock	17	17
02112-43085	SCREW	41	30
02112-74108	SCREW, stop switch	41	13
02112-95105	SCREW	41	23
02112-95208	SCREW, gear shift switcl	23	21

Estelar

SEARCH

<< BACK TO INDEX

P/N	DESCRIPTION	PAGE	ITEM
02112-95208	SCREW, gear shift switch	23	21
02122-06128	SCREW, gear shift cam b	23	13
02122-06128	SCREW, steering lock	32	8
02122-06168	SCREW, intake	2	12
02122-06258	SCREW, oil pump	15	6
02142-05125	SCREW, erverse cable &	34	13
02142-05125	SCREW, front fender cen	39	7
02142-05128	SCREW, pick-up coil(M5	25	4
02142-05128	SCREW, turn signal lamp	36	13
02142-05128	SCREW, turn signal lamp	36	17
02142-05165	BOLT, radiator fan	19	5
02142-05246	SCREW, turnignal lamp	30	5
02142-06125	SCREW, air cleaner	13	8
02142-06126	SCREW, electric part plat	26	20
02142-06165	SCREW, air cleaner	13	9
03211-03128	SCREW	34	9
03241-05166	SCREW, tail & stop	29	2
03241-06166	SCREW, head lamp	28	8
04111-20158	COTTER PIN, clutch cab	40	6
04111-20206	COTTER PIN, rr brake pe	35	7
04111-20206	COTTER PIN, knouckle s	43	15
04111-20206	COTTER PIN, rod end	45	4
04111-20206	COTTER PIN, steering	46	12
04111-20206	COTTER PIN, knouckle s	47	15
04111-20208	COTTER PIN, rear m/cyl	35	11
04111-30258	PIN, front axle end	48	16
04111-40328	COTTER PIN REAR HU	54	12
04111-40328	COTTER PIN REAR HU	55	13
04213-09129	PIN, magneto cover knoc	6	7
04213-13189	PIN, cylinder knock	3	4
04213-13189	PIN, crankcase knock	4	6
04213-13189	PIN, clutch cover knock	5	7
04221-04069	PIN, balancer drive	9	4
04222-03089	PIN, water pump case	5	11
06111-12004	BALL, oil check	5	9
07110-06168	BOLT, oil hose No.1	16	13
07110-06208	BOLT, tensioner adjuster	11	8
07110-06308	BOLT, magneto stator(M	25	5
07110-08168	BOLT, starter clutch	8	6
07110-08255	BOLT, handle balancer	41	5
07120-06408	BOLT, cylinder head No.	2	14
07120-08208	BOLT, engine mounting f	4	10
07120-08208	BOLT, exhaust pipe conn	14	9
07120-08208	BOLT, engine mounting f	33	18
07120-08208	BOLT, front grip comp	36	6
07120-08208	BOLT, grip rear	36	16
07120-08208	BOLT	52	23
07120-08258	BLT, rear frame upper	33	3
07120-08258	BOLT, pressure control v	50	3
07120-08258	CALIPER ASSY REAR I	54	28
07120-08508	BOLT, crankcase M8	4	8
07120-08608	BOLT, chain guide	52	19
07120-08608	BOLT, chain guide	52	28
07120-10306	BOLT (M10 X 1.25P)	52	31
07120-10306	BOLT(M10 X 1.25P)	54	29
08113-62030	BEARING, drive shaft R	22	23
08113-62040	BEARING, crank balance	9	2
08113-63040	BEARING, counter shaft	22	8
08113-63060	BEARING, crank shaft R	7	7
08113-63070	BEARING, crank shaft L	7	8

Estelar

SEARCH

<< BACK TO INDEX

P/N	DESCRIPTION	PAGE	ITEM
08113-69000	BEARING, water pump	18	16
08123-62030	BEARING, counter shaft	22	9
08123-63050	BEARING, drive shaft L	22	24
08130-60037	BEARING, front hub R/l	48	5
08130-60047	BEARING, front hub R/L	48	8
08130-60087	BEARING, rear axle	54	17
08130-60087	BEARING, rear axle	54	25
08211-06141	WASHER, gear shift shaf	23	26
08211-06181	WASHER, camchain tens	11	4
08211-10285	WASHER, balancer bolt	9	6
08211-12281	THRUST WASHER, clut	21	22
08211-14321	WASHER, rear swinging	52	4
08221-10185	SHIM, oil pump driver ge	15	5
08310-22068	NUT, clutch release adjus	21	13
08314-31128	NUT, knuckle steering en	43	14
08314-31128	NUT, knuckle steering en	47	14
08314-40103	NUT, rod end	45	3
08314-40106	NUT, rear brake pedal	35	6
08314-40146	NUT, front axle end	48	14
08316-16068	NUT, cylinder M6	3	5
08316-16068	NUT, starter motor termir	24	2
08316-16088	NUT, chain guide	52	17
08316-26055	NUT, tail & stop	29	3
08316-26055	COVER, license lamp	29	6
08316-26055	NUT, license lamp	29	8
08316-26055	NUT, reflex reflector	36	20
08316-26066	NUT, starter motor relay	26	2
08316-26108	NUT, rr axle housing &	54	33
08316-26128	NUT, magneto	25	6
08316-26886	NUT, exhaust pipe	14	18
08319-21068	NUT, brake lever pivot	41	11
08319-21068	NUT, clutch lever pivot	41	17
08319-31088	NUT, sprocket mtg flange	55	9
08319-31106	NUT, steering shaft	46	11
08319-31108	NUT, engine mounting lo	4	5
08319-31108	NUT, suspension arm R	43	8
08319-31108	NUT, front shock absorbe	43	19
08319-31108	NUT, suspension arm L	47	8
08319-31108	NUT, front shock absorbe	47	19
08319-31108	NUT, rear shock absorber	53	7
08319-31108	NUT, rear shock absorber	53	9
08319-31128	NUT, rear cushion lever f	53	21
08319-31128	NUT, rear cushion lever r	53	25
08319-31128	NUT, rear cushion lever f	53	35
08322-11106	WASHER, blake pedal	35	8
08322-21068	WASHER, rear master cy	35	10
08322-21108	WASHER, suspension up	45	2
08322-21108	WASHER, stay housing	54	31
08331-31109	CIRCLIP, oil pump drive	15	4
08331-31149	CIRCLIP, gear shift shaft	23	33
08331-31329	CIRCLIP, knuckle steerin	43	10
08331-31329	CIRCLIP, knuckle steerin	47	10
08331-31389	CIRCLIP, oil pump drive	15	12
08332-11066	E-RING, seat set	44	7
08332-11086	E-RING, water pump	18	17
09100H06001	BOLT, impeller	18	9
09100H06009	BOLT, clutch spring	21	19
09103-081B6	BOLT, steering holder	46	5
09103H06002	BOLT, camshaft housing	2	13
09103H10001	BOLT, cylinder head (M1	2	5

Estelar

SEARCH

<< BACK TO INDEX

P/N	DESCRIPTION	PAGE	ITEM
09103H10101	BOLT, front shock absorl	43	18
09103H10101	BOLT, front shock absorl	47	18
09103H10101	BOLT, rear shock absorb	53	8
09103H10122	BOLT, rr axle housing &	54	32
09103H10230	BOLT, rear shock absorb	53	6
09103H10758	BOLT, suspension arm R	43	3
09103H10758	BOLT, suspension arm L	47	3
09103H12056	BOTL, housing	54	22
09103H14076	BOLT, rear cushion lever	53	24
09103H14756	BOLT, rear cushion lever	53	23
09103H14756	BOLT, rear cushion lever	53	34
09106H05078	WASHER, front fender &	39	6
09106H05150	SCREW, reservior tank	35	15
09106H05150	SCREW, front fender & s	39	5
09106H05150	SCREW, steering head cc	40	8
09106H06078	WASHER, front fender &	39	11
09106H06080	BOLT, exhaust cover	14	15
09106H06150	BOLT, muffler cover	14	5
09106H06150	SCREW, side cover brak	33	9
09106H06150	SCREW, engine lower prc	33	13
09106H06150	SCREW, oil tank protect	33	20
09106H06150	BOLT, grip front cover	36	8
09106H06150	BOLT, front turnsignal tu	36	12
09106H06150	BOLT, front fender & fra	39	10
09106H06150	BOLT, rear fender & rear	42	2
09106H06150	SCREW, footrest mudgua	42	12
09106H06150	SCREW, chain touch defl	52	25
09106H06150	BOLT, rear cushion lever	53	40
09106H06200	BOLT, head lamp	28	5
09106H06200	BOLT, master cylinder	35	17
09106H06200	BOLT, front fender brace	39	12
09106H06200	BOTL, front fender brace	42	4
09106H06208	SCREW, side cover	38	4
09106H07017	BOLT, cylinder head cov	1	3
09106H07018	BOLT, cylinder head cov	1	4
09106H08308	BOLT, sprocket mtg flan	55	8
09106H10259	BOLT, rear frame lower	33	4
09111-06019	BOLT, gear shift cam sto	23	24
09116-06143	BOLT, radiator	19	7
09119H06208	SCREW, side cover & fra	38	7
09128-06005	BOLT, 2nd air pipe	17	27
09128-06005	BOLT, horn	32	7
09128H05005	SCREW, engine oil strain	15	20
09134-06010	SCREW, clutch release a	21	12
09136-06017	SCREW, reserver tank	20	9
09136-06017	STOPPER, clutch release	21	8
09139H06016	SCREW, rr fender rr upp	33	26
09140H18001	NUT, primary drive gear	7	11
09140H20001	NUT, clutch sleeve hub	21	5
09140H36103	NUT, axle No.1	55	5
09140H36163	NUT, axle No.2	55	6
09141-18008	NUT, rear axle end	54	11
09141-18008	NUT, rear axle end	55	12
09146H18001	WASHER, water pump d	7	12
09148-05019	NUT, front fender center	39	8
09148-05039	NUT, head lamp	28	7
09148H05029	NUT, side cover & front	38	3
09148H05029	NUT, front fender center	39	9
09148H05029	NUT, front fender rear	39	16
09148H05029	NUT, rear fender & side	42	9

Estelar

SEARCH

P/N	DESCRIPTION	PAGE	ITEM
09152H06120	NUT, air cleaner	13	16
09159H10098	NUT, wheel	48	17
09159H10098	NUT, rear wheel	54	9
09159H10098	NUT, rear wheel	55	15
09159H14008	NUT, rear swingingarm p	52	7
09160-06006	WASHER, oil tank	16	5
09160-06006	WASHER, head lamp	28	6
09160-06006	WASHER, front fender b	39	13
09160-06006	WASHER, front fender b	42	5
09160-06060	WASHER, side cover	38	5
09160-06060	WASHER, side cover	38	8
09160-08002	WASHER, muffler suppo	14	13
09160-10068	WASHER, steering	46	10
09160-12011	WASHER, knuchle steeri	43	13
09160-12011	WASHER, knuckle steeri	47	13
09160-15015	WASHER, clutch release	21	15
09160-18009	WASHER, rear axle	55	10
09160H10002	WASHER, cylinder head	2	6
09160H12003	WASHER, magneto	25	8
09160H14003	WASHER, gear shift shaf	23	32
09160H20002	WASHER, clutch sleeve l	21	2
09160H20002	WASHER, primary drive	21	4
09161-10005	WASHER, brake hose	53	12
09161-10009	WASHER, brake fluid	50	21
09161H11008	WASHER, cylinder head	1	5
09164H06001	WASHER, impeller rock	18	10
09164H18001	WASHER, rear axle	54	10
09164H18002	WASHER, front axle end	48	19
09167H25001	THRUST WASHER, 5th	22	19
09167H25001	WASHER, 3rd driven gea	22	26
09167H25001	WASHER, 4th drive gear	22	42
09167H25001	WASHER, reverse driver	22	48
09167H25002	WASHER, 3rd & 4th driv	22	22
09167H25003	WASHER, thrust washer	22	31
09168-08008	GASKET, oil drain	16	9
09168-08015	GASKET, oil check plug	5	15
09168-14011	GASKET, oil tank hose	16	16
09168H06001	GASKET, impeller	18	11
09168H06019	GASKET, water drain bo	3	7
09168H06019	GASKET, oil galley bolt	5	13
09168H06019	GASKET, water drain plu	18	6
09168H10003	GASKET, oil galley bolt	5	17
09168H12003	GASKET, tdc plug	6	4
09168H14003	GASKET, drain plug	15	19
09169H05078	WASHER, steering head	40	9
09169H06011	WASHER, chain touch d	52	26
09169H06078	WASHER, grip front cov	36	9
09169H06078	WASHER, rear fender &	42	3
09169H06078	WASHER, footrest mudg	42	13
09180-06006	SPACER, oil tank	16	7
09180-06011	BUSH, speedometer	31	7
09180-06030	SPACER, oil tank	16	18
09180-06030	SPACER, radiator	19	8
09180-06030	SPACER, side cover & si	38	9
09180-06030	SPACER, front fender bra	39	14
09180-06030	SPACER, front fender bra	42	6
09180-06084	SPACER, side cover	38	6
09180H06066	SPACER, fuel tank	37	8
09180H10004	SPACER, rear shock absc	53	29
09180H13001	SPACER, starter idle gea	8	8

Estelar

SEARCH

<< BACK TO INDEX

P/N	DESCRIPTION	PAGE	ITEM
09180H14001	SHIM, gear shift shaft	23	30
09180H14011	SPACER, rear cushion le	53	39
09180H14012	SPACER, front axle outer	48	10
09180H14013	SPACER, rear cushion	53	20
09180H14013	SPACER, rear cushion	53	32
09180H14013	SPACER, rear cushion	53	38
09180H14014	SPACER, rear cushion le	53	22
09180H14014	SPACER, rear cushion le	53	33
09180H20102	SPACER, front axle inner	48	3
09180H44001	SPACER, rear axle R	54	5
09180H44001	SPACER, rear axle L	55	4
09181H14001	SHIM, gear shift shift thr	23	18
09181H17001	SHIM, drive shaft	22	37
09181H20001	SHIM, 1st driven gear	22	14
09181H25001	SHIM, 5th drive gear	22	44
09200-06004	PIN, clutch cable	40	5
09200H06040	PIN, rear master cylinder	35	9
09206-08001	KNOCK PIN, camshaft h	2	8
09209-05011	CONTACT, gear shift sw	23	16
09247-100A9	BOLT, oil galley	5	16
09247-14002	PLUG, oil drain	15	18
09247H12102	PLUG, tdc	6	3
09259-26015	PLUG, crankshaft hole	6	5
09259-2601503P	PLUG, eng oil filter	5	5
09261-06001	PIN, oil pump driven gear	15	11
09261H04001	PIN, oil pump driven gear	15	3
09262H04001	PIN, oil pump	15	7
09262H25002	BEARING, gear shift can	23	11
09263-20061	BEARING, rear cushion	53	18
09263-20061	BEARING, rear cushion l	53	30
09263-20061	BEARING, rear cushion l	53	36
09263-22017	BEARING, rear swinging	52	6
09263H14002	BEARING, gear shift sha	23	36
09263H15001	BEARING, clutch release	21	14
09263H16002	BEARING, front shock al	43	20
09263H16002	BEARING, ft shock abso	43	24
09263H16002	BEARING, ft shock abso	47	20
09263H16002	BEARING, ft shock abso	47	24
09263H16002	BEARING, ft shock abso	53	4
09263H17007	BEARING, suspension ar	43	6
09263H17007	BEARING, suspension ar	47	6
09263H20004	BEARING, rear cushion l	53	27
09263H25002	BEARING, starter clutch	8	7
09263H25002	BEARING, gear shift can	23	14
09263H37001	BEARING, crank pin	7	3
09280-10006	O-RING, oil hose No.1	16	14
09280-14003	O-RING, steering shaft lo	46	9
09280-22008	O-RING, crankshaft hole	6	6
09280-26007	O-RING, gear shift switch	23	19
09280-60005	O-RING, oil strainer cap	15	17
09280H17003	O-RING, eng oil filter plu	5	6
09280H17003	O-RING, oil level gauge	16	3
09281H22001	DUST SEAL	34	10
09281H28001	DUST SEAL, reverse lev	34	3
09282-10007	SEAL, gear shift fork No.	23	12
09282-12001	SEAL, crank shaft oil rh	7	21
09282H12002	OIL SEAL, clutch release	21	21
09283-50006	SEAL, rear axle	54	16
09283-50006	SEAL, rear axle	54	24
09283H10001	SEAL, oil	18	15

Estelar

SEARCH

<< BACK TO INDEX

P/N	DESCRIPTION	PAGE	ITEM
09283H14002	SEAL, gear shift shaft oil	23	34
09283H25003	OIL SEAL, drive shaft	22	27
09284-21001	SEAL, front hub R/L outc	48	9
09284-26002	SEAL, front hub r/l inner	48	4
09284H16007	SEAL, brake peda;	35	3
09284H16223	SEAL, ft shock absorber	43	23
09284H16223	SEAL, ft shkck absorber	47	23
09284H16223	SEAL, ft shock absorber	53	5
09284H20001	SEAL, rear cushion lever	53	19
09284H20001	SEAL, rear cushion lever	53	28
09284H20001	SEAL, rear cushion lever	53	31
09284H20001	SEAL, rear cushion lever	53	37
09284H28003	DUST CAP, suspension l	43	9
09284H28003	DUST CAP, suspension l	47	9
09284H38003	DUST CAP, rear swingin	52	3
09285-22001	SEAL, rear swingarmarm	52	5
09285-22001	SEAL, rear swingingarm	52	9
09285H17001	SEAL, suspension arm	43	5
09285H17001	SEAL,suspension arm	47	5
09289-05008	SEAL, valve stem oil	10	4
09320-08018	CUSHION, rear fender &	42	8
09320-08028	CUSHION, front fender &	39	4
09320-09016	CUSHION, side cover &	38	10
09320-09016	CUSHION, front fender b	39	15
09320-09016	CUSHION, front fender b	42	7
09320-10015	CUSHION, oil tank	16	6
09320-10015	CUSHION, radiator	19	9
09320H10039	CUSHION, fuel tank NO	37	7
09320H12059	CUSHION, muffler suppo	14	11
09320H12061	GROMMET, rear fender	32	14

P/N	DESCRIPTION	PAGE	ITEM
09321-100B2	CUSHION, seat set	44	3
09343-05052	HOSE, fuel tank bredther	37	4
09352-50823	HOSE, 2nd vacuum	17	22
09360-10039	BOLT, front brake master	50	20
09360-10039	BOLT, brake hose	53	11
09360H12007	BOLT, oil tank hose unio	16	15
09362H20001	UNION, engine oil filter	15	14
09367H05001	NIPPLE, fuel pump joint	17	11
09380H22001	CILCLIP, 2nd drive gear	22	39
09380H25001	CIRCLIP, 5th drive gear	22	7
09380H25001	CIRCLIP, 4th driven gear	22	17
09380H25001	CIRCLIP, 3rd driven gear	22	25
09380H25001	.CILCLIP, 4th drive gear	22	35
09380H25001	CILCLIP, 2nd driven gea	22	38
09380H25001	CIRCLIP, reverse driven	22	47
09380H30002	SNAP RING, dust seal	46	6
09381H19001	CIRCLIP, piston pin	7	16
09381H19001	CIRCLIP, piston pin(AL	7	16-1
09385H13001	CLIP, front brake hose	50	19
09401-08401	CLIP, fuel pump vacuum	17	14
09401-08401	CLIP, fuel cock vacuum h	17	16
09401-09101	CLIP, fuel pump vacuum	17	13
09401-10401	CLIP, oil tank overflow h	16	11
09401-10401	CLIP, fuel pump inlet hos	17	5
09401-10401	CLIP, fuel pump outlet ho	17	8
09401-14301	CLIP, drain plug	13	14
09401H08401	CLAMP, intake pipe RH	17	10
09401H08401	CLAMP, 2nd vacuum hos	17	23
09401H11401	CLIP, fuel pump inlet hos	17	4
09401H11401	CLIP, fuel pump outlet ho	17	7

Estelar

SEARCH

<< BACK TO INDEX

P/N	DESCRIPTION	PAGE	ITEM
09401H11403	CLAMP, reserver tank hc	20	11
09401H11403	CLAMP, reserver tank hc	20	13
09401H13401	CLAMP, 2nd air pipe hos	17	25
09401H13401	CLAMP, thermostat bypa	18	8
09401H14401	CLAMP, 2nd air outlet tu	17	21
09401H14401	CLAMP, breather oil retu	17	32
09401H26402	CLAMP, radiator inlet ho	20	4
09401H26402	CLAMP, radiator inlet ho	20	6
09402-58208	CLAMP, carburetor	2	9
09402-58208	CLAMP, carburetor	2	11
09402-68207	CLAMP, outlet tube No.2	13	12
09402-88207	CLAMP, outlet tube	13	11
09403H09304	CLAMP, reverse cable	6	10
09404-06401	CLAMP, radiator fan	19	6
09404-06401	CLAMP, rectifier regulat	26	18
09407-08307	SCRIVET, oil tank protec	33	15
09407-08307	SCRIVET, rear fender &	42	14
09407-14403	CLAMP, wiring harness	32	6
09407-14403	CLAMP, wiring harness	40	12
09407-14408	CLAMP, wiring harness	32	11
09407-20406	CLAMP, speed sensor	31	10
09407-20406	CLAMP, wiring harness	32	12
09407-20406	CLAMP	41	8
09407-22402	CLAMP, wiring harness	32	10
09420H04001	KEY, magneto	25	7
09440-04010	SPRING, gear shift shift	23	15
09440H08001	SPRING, oil check ball	5	8
09440H10001	SPRING, gear shift fork N	23	8
09440H14011	SPRING	41	26
09440H17001	SPRING, gear shift cam	23	17
09440H20003	SPRING, clutch	21	17
09443-06058	SPRING, rear stop switch	32	9
09444H20011	SPRING, gear shift shaft	23	29
09448H11001	SPRING	34	6
09448H15003	SPRING	41	22
09448H17002	SPRING, gear shift cam s	23	23
09448H30002	SPRING, brakepedal , ret	35	5
09471-12103	BULB, head lamp(12v S2	28	2
09471-12110	BULB, position lamp	28	4
09471-12150	BULB, license lamp(12V	29	14
09471H12112	BULB, (12V)	30	4
09482-00456	PLUG, spark CR8E	2	7
11110SP8900HPA	CYLINDER HEAD(plug	2	1
11131HP8900888	HOUSING ,camshaft inta	2	3
11132HP8900888	HOUSING ,camshaft exh	2	4
11141HP8900	GASKET, cylinder head	2	2
11171HP89000S1	COVER COMP, cylinder	1	1
11173HP8900	GASKET, cylinder head	1	2
11210HP8900HPA	CYLINDER COMP(unio	3	1
11210HP8920HPA	CYLINDER COMP(AL	3	1-1
11241HP8900	GASKET, cylinder	3	2
11300HP8900HPA	CRANKCASE ASS'Y	4	0
11310HP8900HPA	CRANKCASE COMP, R	4	1
11316HP8900	GUIDE, oil return	4	14
11320HP8900HPA	CRANKCASE COMP, L	4	2
11330HP89000S1	COVER COMP, clutch	5	1
11341HP89000S1	COVER OUTER COMP,	5	3
11351HP89000S1	COVER, magneto	6	1
11360HP89000S1	COVER COMP, engine s	6	11
11481HP8900	GASKET, clutch cover	5	2

Estelar

SEARCH

<< BACK TO INDEX

P/N	DESCRIPTION	PAGE	ITEM
11482HP8900	O-RING, clutch outer cov	5	4
11483HP8900	GASKET, magneto cover	6	2
11971HP8900	GAUGE, oil level	16	2
12110SP8900HPA	PISTON SET (piston + r	7	*
12110SP8920HPA	PISTON SET(AL mono	7	*
12111HP8900PPS	PISTON	7	14
12111HP8920	PISTON(AL mono block)	7	14-1
12140HP8900	RINGSET, piston(R/no. 1	7	17
12140HP8920	RINGSET, piston(AL mo	7	17-1
12141HP8900	RING, piston 1st	7	18
12141HP8920	RING, piston 1st(AL mor	7	18-1
12142HP8900	RING, piston 2nd	7	19
12142HP8920	RING, piston 2nd(AL mo	7	19-1
12144HP8900	RING, piston oil	7	20
12144HP8920	RING, piston oil(AL mor	7	20-1
12151HP8901	PIN, piston	7	15
12151HP8920	PIN, piston(AL mono blo	7	15-1
12161HP8900	ROD, connecting	7	2
12200HP8900HPA	CRANK SHAFT ASS'Y	7	1
12211HP8900888	PIN COMP, crank	7	4
12221HP8900CSA	CRANK SHAFT, R	7	5
12261HP8900CSA	CRANK SHAFT, L	7	6
12281HN9100	RETAINER, crank shaft (	7	23
12291HN9100	JET, crank shaft R	7	22
12611HN9100	GEAR, starter idle	8	1
12612HP8900	SHAFT, sharter idle gear	8	2
12614HP8900	CLUTCH, starter one way	8	3
12620HP8900HPA	GEAR COMP, starter clu	8	4
12621HP8900	GEAR, starter clutch	8	5
12651HP8900	BALANCER, crank	9	1
12660HP8900	GEAR, crank balancer dr	9	3
12710HP8900HPA	CAMSHAFT ASS'Y, int	10	1
12720HP8900HPA	CAMSHAFT ASS'Y, exh	10	2
12760HP8900	CHAIN COMP, camshaft	11	1
12771HP8900	GUIDE, camchain NO.1	11	2
12782HP8900	GUIDE, camchain NO.2	11	9
12811HN9101	TENSIONER, camchain	11	3
12812-35C00	BOLT, camchain tensione	11	5
12830HN9120	ADJUSTER ASS'Y, tensi	11	7
12837HP8900	GASKET, tensioner adjus	11	6
12881HP8900	TAPPET,	10	11
12911HP8900	VALVE, intake	10	6
12912HP8900	VALVE, exhaust	10	7
12921HP8900	SPRING, valve inner	10	8
12922HP8900	SPRING, valve outer	10	3
12931HP8900	RETAINER, valve spring	10	9
12932HD6300	COTTER, valve	10	10
12933HP8900	SEAT, valve spring	10	5
13110HP8900	PIPE COMP, intake	2	10
13200HS89A0	CARBURATOR ASS'Y	12	0
13324HP8900	MAIN JET	12	D
13551HP8900	PISTON VALVE	12	D
13700HP8900	CLEANER ASS'Y, air	13	0
13721HP8900	CASE, air cleaner front	13	1
13722HP8900	CASE, air cleaner rear	13	2
13741HP8900	CAP, air cleaner	13	3
13746HP8900	GASKET, air cleaner	13	4
13750HP8900	TRAP COMP, air cleaner	13	5
13761HP8900	STOPPER, trap	13	7
13780HP8900	FILTER COMP, air cleane	13	6

Estelar

SEARCH

P/N	DESCRIPTION	PAGE	ITEM
13870HP8900	JOINT, breather hose	13	15
13881HP8900	TUBE, outlet	13	10
13895HF4500	PLUG, drain	13	13
14150HP8900PLH	PIPE COMP, exhaust (RI	14	6
14150HP8900PLH	PIPE ASS'Y, exhaust	14	19
14181HP8900	GASKET, exhaust pipe	14	16
14280HP8900	COVER COMP, exhaust	14	14
14301HS89A0PLH	BODY ASS'Y, muffler	14	20
14310HS89A0	BODY COMP, muffler	14	1
14770HP8900	CONNECTOR COMP, e:	14	8
14773HP8900	GASKET, exhaust conne	14	7
14790HP8900	COVER COMP, muffler	14	2
14810HP8900	PIPE COMP, tail	14	3
14821HP8900	GASKET, tail pipe	14	4
15100HG5100	PUMP ASS'Y, fuel	17	1
15821HP8900	HOSE, fuel pump outlet	17	6
15831HP8900	HOSE, fuel pump vacuun	17	12
15851HP8901	HOSE, intake pipe RH	17	9
16321HN9103	GEAR, oil pump driven	15	10
16331HN9104	GEAR, oil pump driven	15	2
16400HP8900	PUMP ASS'Y, oil	15	1
16421HP8900	PROTECT, oil tank	33	14
16422HP8900	PROTECTOR, oil tank re	33	19
16441HN9100	ROTOR, oil pump inner I	15	8
16442HN9100	ROTOR, oil pump inner I	15	9
16450HP8900	BUSH COMP, oil check	5	10
16460HP8900	HOSE COMP, oil No.1	16	12
16470HP8900	HOSE COMP, oil No.2	16	17
16510HP8900HAS	FILTER ASS'Y, engine o	15	13
16520-05202	STRAINER COMP, engi	15	15
16523-05200	CAP, oil strainer	15	16
16610HP8900	TANK COMP, oil	16	1
16631HP8900	HOSE, oil tank overflow	16	10
16810HP8900	TANK ASS'Y, breather o	17	28
16821HP8900	HOSE, breather oil return	17	29
16831HP8900	HOSE, breather oil return	17	31
16841HP8900	HOSE, breather oil return	17	30
17410HP8900	CASE COMP, water pum	18	1
17432HP8900	SHAFT, water pump	18	13
17441HN9100	IMPELLER, water pump	18	12
17461HP8900	O-RING, water pump cas	18	2
17470HN9100	SEAL, mechanical	18	14
17511HN9103	GEAR, water pump drive	7	9
17610HP8900	THERMOSTAT COMP	20	2
17631HP8900	CAP, thermostat connecto	20	1
17641HP8900	HOSE, thermostat bypass	18	7
17710HP8900	RADIATOR COMP, wat	19	1
17720HN9100	CAP COMP, radiator	19	2
17741HP8900	HOSE, radiator inlet	20	3
17751HP8900	HOSE, radiator inlet	20	5
17800HN9102	FAN ASS'Y, radiator	19	3
17810HN9100	MOTOR ASS'Y, radiator	19	4
17860HN9100	SWITCH ASSY, thermo	20	15
17860HP8900	SWITCH ASSY, water te	20	14
17911HP8900	TANK COMP, reserver	20	7
17921HN9100	CAP, reserver tank	20	8
17981HP8900	HOSE, radiator tank outle	20	10
17982HP8900	HOSE, reserver tank over	20	12
18500HP8900	VALVE ASS'Y, 2nd air	17	19
18610HP8900	PIPE COMP, 2nd air	17	26

Estelar

SEARCH

<< BACK TO INDEX

P/N	DESCRIPTION	PAGE	ITEM
18631HP8900	HOSE, 2nd air pipe	17	24
18651HP8900	HOSE, 2nd outlet tube	17	20
21111HP8900	GEAR, primary drive	7	10
21200HP8900HPA	GEAR ASS'Y, primary di	21	1
21251HP8900	SPACER, primary driven	21	28
21411HN9102	HUB, clutch sleeve	21	3
21441HN9100	PLATE, clutch drive	21	9
21442HN9100	PLATE, clutch driven No	21	25
21443HN9100	WASHER, clutch wave	21	26
21444HN9100	SEAT, clutch wave washe	21	27
21451HN9100	PLATE, clutch driven	21	10
21462HN9101	DISK, clutch pressure	21	16
21471HN9100	RETAINER, clutch spring	21	18
23110HP8900	ROD COMP, clutch push	21	7
23114HN9100	ROD, clutch push	21	6
23121-38201	PIECE, clutch push	21	11
23122HP8900	SHAFT, clutch release ca	21	23
23271HP8900	ARM, clutch release	21	20
24120HP8900HPA	SHAFT ASS'Y, counter	22	2
24130SP8900HPA	SHAFT COMP, drive(wi	22	1
24200HP8900HPA	MISSION GR SET	22	0
24221HP8900	GEAR, 2nd drive	22	4
24231HP8900	GEAR, 3rd drive	22	5
24241HP8900	GEAR, 4th drive	22	36
24251HP8900	GEAR, 5th drive	22	6
24252HN9100	BUSH, 5th drive gear	22	43
24262HN9100	BUSH, 4th drive gear	22	41
24311HP8900	GEAR, 1st driven	22	13
24312HP8900	BUSH, 1st driven gear	22	15
24321HP8900	GEAR, 2nd drive	22	16
24322HN9100	BUSH, 3nd driven gear	22	40
24331HP8900	GEAR, 3rd driven	22	18
24332HN9100	BUSH, 3rd driven gear	22	32
24332HN9100	BUSH, reverse driven gea	22	45
24341HP8900	GEAR, 4th driven	22	3
24351HP8900	GEAR, 4th reverse driver	22	20
24441HP8900	WHEEL, sliding dog	22	46
24521HP8900	GEAR, reverse driven	22	21
24741HN9100	RETAINER, gear shift ca	23	10
24741HP8900	RETAINER, counter shaf	22	10
24751HP8900	RETAINER, drive shaft c	22	28
24760HP8900	PIPE COMP, oil connecte	4	12
25211HP8900	FORK, gear shift No.1	23	2
25221HP8900	FORK, gear shift No.2	23	6
25231HN9100	FORK, gear shift No.3	23	1
25310HP8900	CAM COMP, gear shift	23	5
25321HN9100	BOLT, gear shift cam pla	23	9
25350HN9100	STOPPER COMP, gear s	23	25
25380HN9105	PLATE COMP, gear shif	23	7
25410HP8900	SHAFT, gear shift fork N	23	4
25411HN9100	SHAFT, gear shift fork N	23	3
25510HP8900	SHAFT COMP, gear shif	23	28
25521HN9100	PLATE, gear shift cam dr	23	27
25600HP8900	LEVER ASS'Y, gear shif	23	35
25671-01000	STOPPER, gear shift arm	23	31
27511HP8900	SPROCKET COMP, engi	22	30
27512HP8900	LOCK WASHER, engine	22	33
27520HP8900	GUIDE COMP, drive cha	6	12
27600HP8900	CHAIN ASS'Y, drive 108	22	34
31100HP8900	MOTOR ASSY, starting	24	1

Estelar

SEARCH

P/N	DESCRIPTION	PAGE	ITEM
31800HG5100	RELAY ASS'Y, starting	26	1
32100HP8900	MAGNETO ASS'Y	25	1
32101HP8900	STATOR ASS'Y	25	2
32102HP8900	ROTOR, fly wheel	25	3
32800HP8900	RECTIFIER regulator ass	26	5
32900HP8900	IGNITOR, ASS'Y	26	15
33410HP8900	COIL ASS'Y,ignition	26	7
33500HN9100	CAP ASS'Y spark plug	26	10
33510-05C01	CAP, spark plug	26	12
33541-23E01	SEAL, spark plug	26	11
33542-98000	SEAL, high tention cord	26	13
33545HN9100	BUSH, spark plug cap	26	14
33610HG5100	BATTERY ASS'Y(12V 8	27	1
33840HP8900	LEADWIRE, battery plus	26	3
33850HP8900	LEADWIRE, starter mot	26	4
33860HP8900	LEAD WIRE, battery mi	27	2
34100HP8900	SPEEDOMETER ASS'Y	31	1
34150HP8900	WINDOWS, case	31	2
34160HP8900	CASE SUB, housing	31	3
34170HP8900	WIRING ASS'Y, speedor	31	8
34500HP8900	LCD ASS'Y, speedomete	31	5
34860HP8900	SENSOR ASS'Y, speedo	31	9
35100HP8950	HEAD LAMP ASS'Y	28	1
35171HP8950	SOCKET ASS'Y	28	3
35601HP9501	LAMP ASS'Y, Ft turnsig	30	1
35602HP9501	LAMP ASS'Y, Ft turnsig	30	1-1
35603HP8900	LAMP ASS'Y, Rr turnsig	30	2
35604HP8900	LAMP ASS'Y, Rr turnsig	30	2-1
35609H93B00	VINYL WASHER	30	6
35614HP9500	REFLECTOR, turnsignal	30	3

P/N	DESCRIPTION	PAGE	ITEM
35710HP9500	LAMP ASS'Y, tail & stop	29	1
35780HP8900	COVER, tail & stop	29	4
35910HG5150	LAMP ASSY, license pla	29	5
35911HG5800	LENS, license	29	11
35912HG5800	HOUSING, license	29	12
35915HL7300	NUT, license lamp(M5)	29	7
35916HG5800	CORD ASS'Y	29	13
35970-24D63	REFLEX REFLECTOR	36	19
35970HP8900	COVER REFLEX REFL	29	9
36610HP8901	HARNESS, wiring	32	1
36618-30610	TUBE, wiring harness	32	13
36740-35C00	BOX ASS'Y, fuse(15A)	26	8
37100HP8900	SWITCH ASS'Y, ignitior	32	3
37400HP8900	SWITCH ASSY, handle l	41	6
37720HP8900	SWITCH ASS'Y, gear sh	23	20
37740HP8900	SWITCH ASS'Y, rear sto	32	5
38500HR8300	HORN ASS'Y	32	2
38610HL7300	RELAY ASS'Y, turnsigna	30	7
38740HG5100	RELAY ASS'Y	26	17
41100HP890003P	FRAME COMP	33	1
41146HP8900	PLATE, front fender	33	10
41160HN9100	SPACER COMP, muffler	14	10
41993HP8900	PLATE, engine mounting	33	16
41994HP8900	PLATE, engine mounting	33	17
41995HP8900	SPACE, engine mounting	33	21
41996HP8900	BOLT, engine mounting	4	4
41999HP8900	BOLT, engine mounting	4	3
42100HP890003P	FRAME COMP, rear	33	2
42121HP8900	PLATE, electric part	26	19
42199HP8900	CAP, rear frame main tub	33	22

Estelar

SEARCH

<< BACK TO INDEX

P/N	DESCRIPTION	PAGE	ITEM
42511HP8900	PROTECT, engine lower	33	12
43110HP890003P	PEDAL COMP, rear brak	35	1
43114HP8900	BOSS, brake pedal	35	2
43115HP8900	BUSH, brake pedal	35	4
43510HP8900PAM	FOOT REST, front R	36	21
43520HP8900PAM	FOOT REST, front L	36	22
43530HP8900	BRACE, front footrest RI	36	1
43540HP8900	BRACE, front footrest LI	36	2
43620HP8900	BRAKET COMP, pillion	36	23
43630HP8900	BRAKET COMP, pillion	36	24
43919HP8900	BOLT, chain adjuster	54	20
43970HP8900	COVER, grip front	36	7
43980HP890003P	GRIP COMP, rear	36	18
43990HP895003P	GRIP COMP, front	36	5
43999HP8900	CAP, front grip main pipi	36	10
44110HP8900PAH	TANK ASS'Y, fuel(with	37	1
44197HP8900	HOSE, fuel cock vacuum	17	15
44199HF1602	HOSE, fuel pump inlet	17	3
44200HP8900	CAP COMP, fuel tank	37	3
44300HP8900	COCK ASS'Y, fuel	17	2
44511HP8900	CUSHION, fuel tank fron	37	2
45100HP8950L05	SEAT SET	44	1
45118HP8900	PLATE, seat front hook N	37	5
45119-02C00	PLATE, seat front hook	44	2
45135-243A2	SPRING, seat set	44	6
45210HP8900	CLAMP COM, seat	44	5
45220HP8900	HOOK COMP, seat	37	10
47111HP89000GO	COVER, side R	38	1
47171HP8900	BRACKET, side cover R	33	8
47211HP89000GO	COVER, side L	38	2

P/N	DESCRIPTION	PAGE	ITEM
51091HP8900	TIE ROD, steering	45	1
51210HP8900	ENG, knuckle steering up	43	11
51210HP8900	END, knuckle steering up	47	11
51220HP8900	ENG, knuckle steering lo	43	12
51220HP8900	END, knuckle steering lo	47	12
51230HP8900	KNUCKLE COMP, steer	45	5-1
51240HP8900	KNUCKLE COMP, steer	45	5
51650HP8900	SHAFT COMP, steering	46	1
51661-40B00KOR	BUSH, steering shaft low	46	8
51662-18900	DUST SEAL, steering sh	46	7
51670-245A0	HOLDER, steering shaft	46	2
51678-24500	DUST SEAL, steering sh	46	3
51680HP8900	REINFORCEMENT, hol	46	4
51720HP8900	TUBE COMP, front turns	36	11
51900HP8900	LOCK ASSY, steering	32	4
52100HP8900	ABSORBER ASSY(ORA	43	16
52100HP8900	ABSORBER ASSY, fron	47	16
52410HP8900HPA	ARM COMP, susppensio	43	1
52420HP8900HPA	ARM COMP, suspension	47	1
52450HP8900HPA	ARM COMP, suspension	43	2
52455HP8900	SPACER, suspensing upp	43	4
52455HP8900	SPACER, suspension upp	47	4
52456HP8900	SPACER, suspension low	43	7
52456HP8900	SPACER, suspension low	47	7
52460HP8900HPA	ARM COMP, suspension	47	2
53111HP8950GO	FENDER, front	39	1
53118HP8900	FENDER, center front	39	2
53119HP8950	FENDER, center rear	39	3
53120HP8900	BRACE COMP, front fen	33	5
53130HP8900	BRACE COMP, front fen	33	6

Estelar

SEARCH

P/N	DESCRIPTION	PAGE	ITEM
54110HP8900HPA	HUB ASS'Y, front	48	6
54138HP8900	PLATE, front hub	48	13
54150HP8900	WHEEL COMP, front	48	2
54725HK3101	CAP, wheel center	48	15
54725HK3101	CAP, wheel center	54	13
54725HK3101	CAP, wheel center	55	14
54733HP8900	RETAINER, front wheel	48	7
55100HP8950	TIRE COMP,FT(175/75-	48	1
55220-29C20	VALVE, pressure control	48	18
55220-29C20	VALVE, pressure control	54	3
55220-29C20	VALVE, pressure control	55	3
55310SP8950HPA	TIRE+WHEEL RH ASS'	48	0
55410SP8950HPA	TIRE+WHEEL LH ASS'	48	0-1
56110HP8900	HANDLEBAR COMP	40	1
56171HP8900	COVER, steering head	40	7
56172HP8900	BRACKET, steering heac	31	4
56211-272A0	CLAMP, handlebar	46	14
56271H93B010BF	BALANCER, handlebar	41	3
56400HP8900	CABLE COMP, reverse	34	12
56500HM5450	MIRROR ASS'Y, rear vie	40	10
56501HM5450	MIRROR SET(R/no.10+	40	11-1
56530HP8900	VALVE ASS'Y, pressure	50	1
56540HP8900	BRACKET COMP, pvc	50	2
56600HM5450	MIRROR ASS'Y, rear vie	40	11
56900HP8900	LEVER ASSY, reverse	34	1
56910HP8900	LEVER COMP, reverse	34	2
56921HP8900	HOUSING, reverse lever	34	5
56922HP8900	SPOOL, reverse cable	34	7
56923HP8900	CAP, reverse lever housir	34	8
57100HP8900	CASE ASSY, throttle	41	1

P/N	DESCRIPTION	PAGE	ITEM
57211HG5800	GRIP, handle	41	2
57300HN9102	LEVER ASS'Y, brake	41	4
57351HP8900	LEVER, secondary brake	41	7
57431HN9101	BOLT, brake lever pivot	41	10
57451H93B00	BOLT, clutch lever holde	41	18
57460-17C00	SWITCH ASS'Y STOP	41	12
57460HP8900	SWITCH ASS'Y, clutch	41	9
57511HP8900	HOLDER, clutch lever	41	15
57531HP8900	BOLT, clutch lever pivot	41	16
57620HP8900	LEVER COMP, clutch	41	14
57661HP8900	COVER, clutch lever	41	19
57811HP8900	KNOB, parking brake lev	41	20
57812HP8900	LEVER, parking brake	41	21
57820HP8900	ARM COMP, parking bra	41	24
57823HP8900	PIN, parking brake	41	27
57824HP8900	COVER, parking brake sp	41	28
57825HP8900	CAP, PIN	41	25
58200HP8900	CABLE ASS'Y, clutch	40	4
58300HP8900	CABLE ASS'Y, throttle	40	2
58800HP8900	CABLE ASS'Y, parking	40	3
59121HP8900	BREATHER	50	8
59122HP8900	CAP	50	9
59122HP8900	CAP	56	11
59211HP8900	DISK, front brake	48	11
59214HP8900	COVER, front hub inner	48	12
59266HP8900	CLAMP, front brake hosc	50	17
59300HP8900	CALIPER ASS'Y L	50	1-1
59301HP8900	PAD COMP, caliper	50	3
59302HP8900	AXLE CALIPER PAD	50	5
59303HP8900	E-RING	50	7

Estelar

SEARCH

<< BACK TO INDEX

P/N	DESCRIPTION	PAGE	ITEM
59313HP8900	INSULATOR CALIPER	50	6
59315HP8900	SPRING	50	4
59350HP8900	CALIPER CARRIER	50	2
59400HP8900	CALIPER ASS'Y R	50	1
59421-03A01	BOLT, rr disk flange	54	8
59450HP8900	HOSE COMP, ft brake R	50	16
59460HP8900	HOSE COMP, ft brake ce	50	15
59470HP8900	PIPE COMP, ft m/cylinde	50	12
59480HP8900	HOSE COMP, ft m/cylin	50	9
59490HP8900	HOSE COMP, ft m/cylin	50	13
59510HP8900	PIPE COMP, ft calliper h	50	11
59511HP9200	RESERVOIR CAP PLAT	51	7
59520HP8900	HOSE COMP, ft m/cylin	50	10
59600-35C00	.PISTON, SET	51	3
59600HP8900	CYLINDER ASSY, front	51	0
59667HP9200	DIAPHRAGM	51	8
59669-36510	.CAP, reservoir	51	2
59671-35C00	.HOLDER	51	5
59687HM8162	BODY, master cylinder	51	1
59691-35C00	.SCREW	51	4
61100HP8900HPA	SWINGINGARM ASSY,	52	1
61154HP8900	BRACKET, chain guide	52	18
61181-02C00	BOLT, front shock absorl	43	17
61181-02C10	BOLT, front shock absorl	47	17
61211HP8900	SHAFT, rear swingarm p	52	2
61250HP8900	RESERVIOR TANK	53	13
61251HP8900	SPACER, rear swinginga	52	10
61252HP8900	SPACER, rear swinginga	52	11
61253HP8900	SPACER, rear swinginga	52	12
61261HP8900	BUSH, rear swingingarm	52	13
61262HP8900	BUSH, rear swingingarm	52	14
61273HN9100	BUFFER, chain touch de	52	8
61274HP8900	SLIDER, chain touch def	52	22
61341HP8900	GUIDE, chain	52	29
61342HP8900	PLATE, chain guide	52	27
61390HP8900	GUARD, spoocket	52	15
61420HP8900	BOLT COMP, chain adju	54	19
61423HP8900	NUT, chain adhuster	52	24
61510HP8900	BRACKET COMP, brake	50	18
61511HP8900	BRACKET, brake hose ft	50	4
61520HP8900	CLAMP COMP, rear bral	50	6
61531HP8900	CLAMP, rear brake hose	50	7
61720HP8900	TUBE COMP, reart turns	36	14
61730HP8900	TUBE COMP, resrt turn s	36	15
62100HP8900	ABSORBER ASS'Y(OR/	53	1
62611HP8900HPA	LEVER REAR ASS'Y, re	53	26
62612HP8900HPA	ROD ASS'Y, rear cushior	53	17
62684HP8900	SPACER, ft shock absorb	43	21
62684HP8900	SPACER, ft shock absorb	47	21
62684HP8900	SPACER, ft shock absorb	53	2
62685HP8900	SPACER, ft shock absorb	43	22
62685HP8900	SPACER, ft shock absorb	47	22
62685HP8900	SPACER, ft shock absorb	53	3
62686HP8900	SPACER, ft shockabsorb	43	25
62686HP8900	SPACER, ft shock absorb	47	25
62800HP8900	TOW COMP, TRAINER	52	30
62920HP8900	PLATE, rr shock absorbe	53	14
62960HP8900	HOSE COMP, rear shock	53	10
63111HP8900303	FENDER, rear	42	1
63112HP8900	BRACKET, rear fender r	33	23

Estelar

SEARCH

P/N	DESCRIPTION	PAGE	ITEM
63113HP8900	BRACKET, rear fender r	33	24
63331HP8900	MUDGUARD, footrest R	42	10
63341HP8900	MUDGUARD, footrest L	42	11
64110HP8900	HUB COMP, rear	54	4
64150HP8900	WHEEL COMP, rear	54	1
64150HP8900	WHEEL COMP, rear	55	1
64511HP8900	SPROCKET, rear(44T)	55	7
64611HP8900HPA	FLANGE ASS'Y, sprock	54	26
64711HP8900	AXLE, rear	54	15
64720HP8900HPA	HOUSING ASS'Y, rear a	54	18
64725HP8900	HOLDER, front center ca	48	20
64726HP8900	HOLDER, front center ca	54	14
64726HP8900	HOLDER, front center ca	55	11
64731HP8900	SPACER, rear axle bearir	54	23
64750HP890003P	PLATER, housing L	54	21
64755HP8900	STAY, housing	54	30
65100HP8950	TIRE COMP, rear	54	2
65100HP8950	TIRE COMP, rear	55	2
65310SP8950HPA	TIRE+WHEEL RH ASS'	54	0
65410SP8950HPA	TIRE+WHEEL LH ASS'	55	0
68120HS8950	EMBLEM, GOES	39	17
68124HS8950	TAPE, side front fender R	38	11
68126HS8950	TAPE, side front fender L	38	12
68144HS8950	TAPE, rear fender R	42	15
68146HS8950	TAPE, rear fender L	42	16
68241HP8900	LABEL, gear chain	6	14
68350HP8900	COVER, rear cushion lev	53	16
69211HP8900	DISK, rear brake	54	7
69221HP8900	FLANGE, rear disk	54	6
69232HP8900	COVER, rear disk	52	20

P/N	DESCRIPTION	PAGE	ITEM
69300HP8900	CALIPER ASS'Y, rear	56	1
69301HP8900	BRACKET CALIPER	56	2
69310HP8900	PAD COMP, caliper	56	4
69320HP8900	NUT COMP	56	7
69330HP8900	BOLTS, connet back cov	56	3
69340HP8900	PIN BOLT	56	6
69341HP8900	CARRIER, caliper	54	27
69350HP8900	SPRING PAD	56	5
69360HP8900	CONNECT PART, tigntv	56	8
69370HP8900	PIN, hanger	56	9
69381HP8900	BOLT, shaft	56	10
69470HP8900	HOSE COMP, rr brake m	50	14
69480HP8900	HOSE COMP, rr brake ca	50	5
69609HP8900	CYLINDER ASS'Y, rear	35	16
69700HP8900	HOSE ASS'Y, reservoir t	35	14
69710HP8900	CLAMP, reserver tank ho	35	13
69740HP8900	TANK ASS'Y, reservoir	35	12
69781HP8900	BOLT, shaft	56	12
94433H07C00	CUSHION, speedometer	31	6

Estelar